22-A1- ☆■/□/▲△◆–◇

安装孔尺寸 Mounting hole size:Φ22mm
开关额定值 Switch rating:5A/250VAC
开关组合 Switch combination:1NO1NC
操作类型 Operation types:自复式 Resetable
自锁式 Self–locking
头部形状 Head shape:平形 flat
带灯方式 Lamp type:环形带灯 Ring Illuminated
外壳材料:黄铜镀镍/不锈钢
Enclosure material:Nickel plated brass/Stainless stell
防护等级 Degree of protection:IP67,IK10

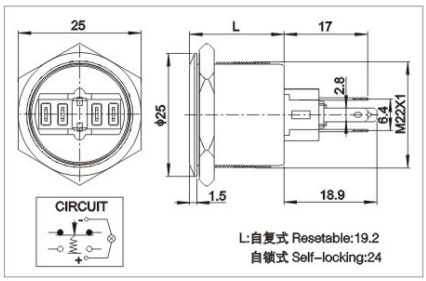

22-A2- ☆■/□/▲△◆–◇

安装孔尺寸 Mounting hole size:Φ22mm
开关额定值 Switch rating:5A/250VAC
开关组合 Switch combination:1NO1NC
操作类型 Operation types:自复式 Resetable
自锁式 Self–locking
头部形状 Head shape:平形 flat
带灯方式 Lamp type:单点带灯 Dot Illuminated
外壳材料:黄铜镀镍/不锈钢
Enclosure material:Nickel plated brass/Stainless stell
防护等级 Degree of protection:IP67,IK10

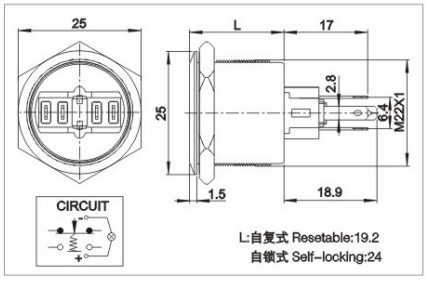

22-A3- ☆■/□/▲△◆–◇

安装孔尺寸 Mounting hole size:Φ22mm
开关额定值 Switch rating:5A/250VAC
开关组合 Switch combination:1NO1NC
操作类型 Operation types:自复式 Resetable
自锁式 Self–locking
头部形状 Head shape:平形 flat
带灯方式 Lamp type:字符带灯 Character Illuminated
外壳材料:黄铜镀镍/不锈钢
Enclosure material:Nickel plated brass/Stainless stell
防护等级 Degree of protection:IP67,IK10

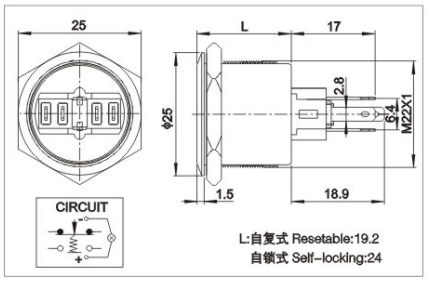

产品规格		Specifications	QN22-A1	QN22-A2	QN22-A3
尾部配置		Tail configuration	接线插片Connection terminal(2.8×0.5)	接线插片Connection terminal(2.8×0.5)	接线插片Connection terminal(2.8×0.5)
开关规格		Switch specifications	5A/250VAC	5A/250VAC	5A/250VAC
接触电阻		Contact resistance	≤50mΩ	≤50mΩ	≤50mΩ
绝缘电阻		Insulation resistance	≥1000MΩ	≥1000MΩ	≥1000MΩ
绝缘强度		Dielectric Intensity	2000VAC	2000VAC	2000VAC
环境温度		Ambient temperature	–20℃~+55℃	–20℃~+55℃	–20℃~+55℃
机械寿命		Mechanical life	50万次以上 500,000 cycles	50万次以上 500,000 cycles	50万次以上 500,000 cycles
电气寿命		Electrical life	5万次以上 50,000 cycles	5万次以上 50,000 cycles	5万次以上 50,000 cycles
面板厚度		Panel thickness	1~10mm	1~10mm	1~10mm
螺母扭矩		Nut torque	5~14Nm	5~14Nm	5~14Nm
操作压力		Operation pressure	约3~5N About 3~5N	约3~5N About 3~5N	约3~5N About 3~5N
操作行程		Operation stroke	约2.5mm About 2.5mm	约2.5mm About 2.5mm	约2.5mm About 2.5mm
防护等级		Protection level	IP67，IK10	IP67，IK10	IP67，IK10
材料 Material	触点	Contact	银合金 Silver alloy	银合金 Silver alloy	银合金 Silver alloy
	按键	Button	黄铜镀镍/不锈钢 Nickel plated brass/stainless stell	黄铜镀镍/不锈钢 Nickel plated brass/stainless stell	黄铜镀镍/不锈钢 Nickel plated brass/stainless stell
	外壳	Enclosure	黄铜镀镍/不锈钢 Nickel plated brass/stainless stell	黄铜镀镍/不锈钢 Nickel plated brass/stainless stell	黄铜镀镍/不锈钢 Nickel plated brass/stainless stell
	基座	Base	PA66	PA66	PA66
灯珠参数 LED Parameters	灯珠类型	LED type	环形带灯Ring Illuminated(LED)	单点带灯Dot Illuminated(LED)	字符带灯Character Illuminated(LED)
	额定电压	Rated voltage	6V/12V/24V/110V/220V	6V/12V/24V/110V/220V	6V/12V/24V/110V/220V
	灯珠颜色	LED color	R O Y G B W	R O Y G B W	R O Y G B W
	灯珠寿命	LED life	40000小时hours	40000小时hours	40000小时hours

Metal Push Button Switch

安装孔尺寸 Mounting hole size:Φ22mm
开关额定值 Switch rating:5A/250VAC
开关组合 Switch combination:1NO1NC
操作类型 Operation types:自复式 Resetable
自锁式 Self-locking
头部形状 Head shape:平形 flat
外壳材料:黄铜镀镍/不锈钢
Enclosure material:Nickel plated brass/Stainless stell
防护等级 Degree of protection:IP67,IK10

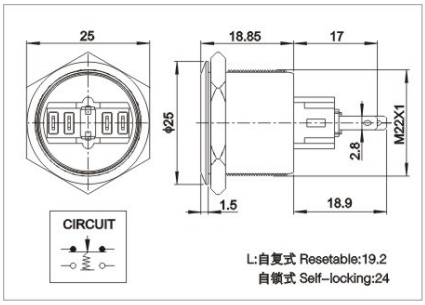

安装孔尺寸 Mounting hole size:Φ22mm
开关额定值 Switch rating:5A/250VAC
开关组合 Switch combination:1NO1NC
操作类型 Operation types:自复式 Resetable
自锁式 Self-locking
头部形状 Head shape:圆形 Round
外壳材料:黄铜镀镍/不锈钢
Enclosure material:Nickel plated brass/Stainless stell
防护等级 Degree of protection:IP67,IK10

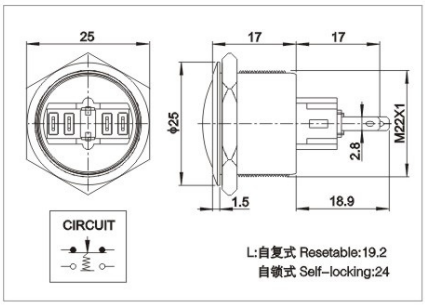

安装孔尺寸 Mounting hole size:Φ22mm
开关额定值 Switch rating:5A/250VAC
开关组合 Switch combination:1NO1NC
操作类型 Operation types:自复式 Resetable
自锁式 Self-locking
头部形状 Head shape:高平形 High flush
外壳材料:黄铜镀镍/不锈钢
Enclosure material:Nickel plated brass/Stainless stell
防护等级 Degree of protection:IP67,IK10

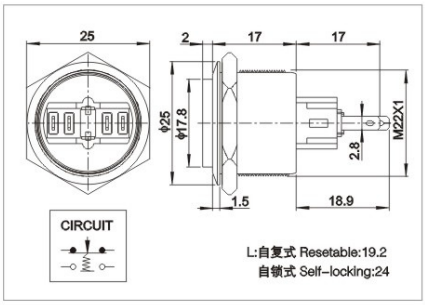

产品规格	Specifications	QN22-B1	QN22-B2	QN22-B3
尾部配置	Tail configuration	接线插片Connection terminal(2.8×0.5)	接线插片Connection terminal(2.8×0.5)	接线插片Connection terminal(2.8×0.5)
开关规格	Switch specifications	5A/250VAC	5A/250VAC	5A/250VAC
接触电阻	Contact resistance	≤50mΩ	≤50mΩ	≤50mΩ
绝缘电阻	Insulation resistance	≥1000MΩ	≥1000MΩ	≥1000MΩ
绝缘强度	Dielectric Intensity	2000VAC	2000VAC	2000VAC
环境温度	Ambient temperature	-20℃~+55℃	-20℃~+55℃	-20℃~+55℃
机械寿命	Mechanical life	50万次以上 500,000 cycles	50万次以上 500,000 cycles	50万次以上 500,000 cycles
电气寿命	Electrical life	5万次以上 50,000 cycles	5万次以上 50,000 cycles	5万次以上 50,000 cycles
面板厚度	Panel thickness	1~10mm	1~10mm	1~10mm
螺母扭矩	Nut torque	5~14Nm	5~14Nm	5~14Nm
操作压力	Operation pressure	约3~5N About 3~5N	约3~5N About 3~5N	约3~5N About 3~5N
操作行程	Operation stroke	约2.5mm About 2.5mm	约2.5mm About 2.5mm	约2.5mm About 2.5mm
防护等级	Protection level	IP67，IK10	IP67，IK10	IP67，IK10
材料 Material 触点	Contact	银合金 Silver alloy	银合金 Silver alloy	银合金 Silver alloy
材料 Material 按键	Button	黄铜镀镍/不锈钢 Nickel plated brass/stainless stell	黄铜镀镍/不锈钢 Nickel plated brass/stainless stell	黄铜镀镍/不锈钢 Nickel plated brass/stainless stell
材料 Material 外壳	Enclosure	黄铜镀镍/不锈钢 Nickel plated brass/stainless stell	黄铜镀镍/不锈钢 Nickel plated brass/stainless stell	黄铜镀镍/不锈钢 Nickel plated brass/stainless stell
材料 Material 基座	Base	PA66	PA66	PA66

安装孔尺寸 Mounting hole size:Φ22mm
开关额定值 Switch rating:5A/250VAC
开关组合 Switch combination:1NO
操作类型 Operation types:自复式 Resetable
头部形状 Head shape:平形 flat
外壳材料:黄铜镀镍/不锈钢
Enclosure material:Nickel plated brass/Stainless stell
防护等级 Degree of protection:IP65,IK10

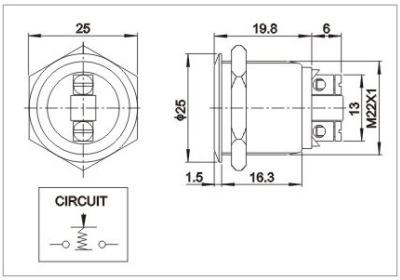

安装孔尺寸 Mounting hole size:Φ22mm
开关额定值 Switch rating:5A/250VAC
开关组合 Switch combination:1NO
操作类型 Operation types:自复式 Resetable
头部形状 Head shape:圆形 Round
外壳材料:黄铜镀镍/不锈钢
Enclosure material:Nickel plated brass/Stainless stell
防护等级 Degree of protection:IP65,IK10

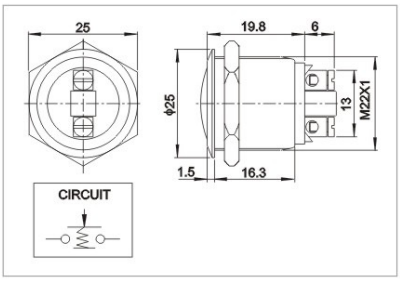

安装孔尺寸 Mounting hole size:Φ22mm
开关额定值 Switch rating:5A/250VAC
开关组合 Switch combination:1NO
操作类型 Operation types:自复式 Resetable
头部形状 Head shape:高平形 High flush
外壳材料:黄铜镀镍/不锈钢
Enclosure material:Nickel plated brass/Stainless stell
防护等级 Degree of protection:IP65,IK10

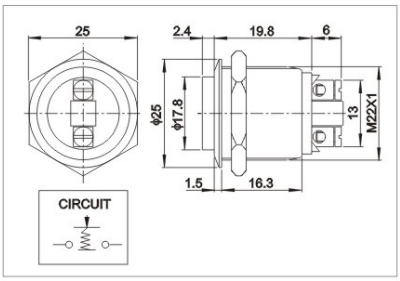

产品规格	Specifications	QN22-C1	QN22-C2	QN22-C3
尾部配置	Tail configuration	接线柱 Wiring terminal	接线柱 Wiring terminal	接线柱 Wiring terminal
开关规格	Switch specifications	5A/250VAC	5A/250VAC	5A/250VAC
接触电阻	Contact resistance	≤50mΩ	≤50mΩ	≤50mΩ
绝缘电阻	Insulation resistance	≥1000MΩ	≥1000MΩ	≥1000MΩ
绝缘强度	Dielectric Intensity	2000VAC	2000VAC	2000VAC
环境温度	Ambient temperature	−20℃ ~ +55℃	−20℃ ~ +55℃	−20℃ ~ +55℃
机械寿命	Mechanical life	50万次以上 500,000 cycles	50万次以上 500,000 cycles	50万次以上 500,000 cycles
电气寿命	Electrical life	5万次以上 50,000 cycles	5万次以上 50,000 cycles	5万次以上 50,000 cycles
面板厚度	Panel thickness	1 ~ 10mm	1 ~ 10mm	1 ~ 10mm
螺母扭矩	Nut torque	5 ~ 14Nm	5 ~ 14Nm	5 ~ 14Nm
操作压力	Operation pressure	约4N About 4N	约4N About 4N	约4N About 4N
操作行程	Operation stroke	约1.8mm About 1.8mm	约1.8mm About 1.8mm	约1.8mm About 1.8mm
防护等级	Protection level	IP65，IK10	IP65，IK10	IP65，IK08
材料 Material 触点	Contact	银合金 Silver alloy	银合金 Silver alloy	银合金 Silver alloy
材料 Material 按键	Button	黄铜镀镍/不锈钢 Nickel plated brass/stainless stell	黄铜镀镍/不锈钢 Nickel plated brass/stainless stell	黄铜镀镍/不锈钢 Nickel plated brass/stainless stell
材料 Material 外壳	Enclosure	黄铜镀镍/不锈钢 Nickel plated brass/stainless stell	黄铜镀镍/不锈钢 Nickel plated brass/stainless stell	黄铜镀镍/不锈钢 Nickel plated brass/stainless stell
材料 Material 基座	Base	PA66	PA66	PA66

安装孔尺寸 Mounting hole size:Φ22mm
开关额定值 Switch rating:3A/250VAC
开关组合 Switch combination:1NO
操作类型 Operation types:自复式 Resetable
头部形状 Head shape:平形 flat
带灯方式 Lamp type:环形带灯 Ring Illuminated
外壳材料:黄铜镀镍/不锈钢
Enclosure material:Nickel plated brass/Stainless stell
防护等级 Degree of protection:IP65,IK08

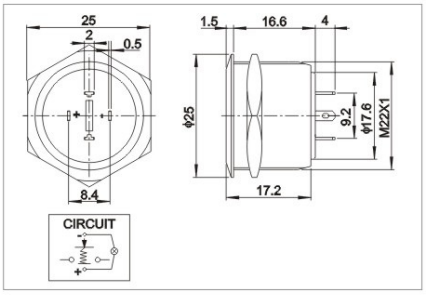

安装孔尺寸 Mounting hole size:Φ22mm
开关额定值 Switch rating:3A/250VAC
开关组合 Switch combination:1NO
操作类型 Operation types:自复式 Resetable
头部形状 Head shape:高平形 High flush
带灯方式 Lamp type:环形带灯 Ring Illuminated
外壳材料:黄铜镀镍/不锈钢
Enclosure material:Nickel plated brass/Stainless stell
防护等级 Degree of protection:IP65,IK08

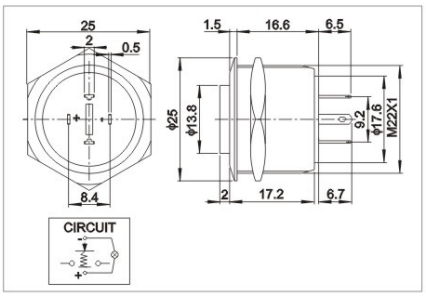

产品规格		Specifications	QN22-D1	QN22-D2	
尾部配置		Tail configuration	接线插片Connection terminal(2.8×0.5)	接线插片Connection terminal(2.8×0.5)	
开关规格		Switch specifications	3A/250VAC	5A/250VAC	
接触电阻		Contact resistance	≤50mΩ	≤50mΩ	
绝缘电阻		Insulation resistance	≥1000MΩ	≥1000MΩ	
绝缘强度		Dielectric Intensity	2000VAC	2000VAC	
环境温度		Ambient temperature	−20℃ ~ +55℃	−20℃ ~ +55℃	
机械寿命		Mechanical life	50万次以上 500,000 cycles	50万次以上 500,000 cycles	
电气寿命		Electrical life	5万次以上 50,000 cycles	5万次以上 50,000 cycles	
面板厚度		Panel thickness	1 ~ 10mm	1 ~ 10mm	
螺母扭矩		Nut torque	5 ~ 14Nm	5 ~ 14Nm	
操作压力		Operation pressure	约3 ~ 5N About 3 ~ 5N	约3 ~ 5N About 3 ~ 5N	
操作行程		Operation stroke	约2.5mm About 2.5mm	约2.5mm About 2.5mm	
防护等级		Protection level	IP65，IK08	IP65，IK08	
材料 Material	触点	Contact	银合金 Silver alloy	银合金 Silver alloy	
	按键	Button	黄铜镀镍/不锈钢 Nickel plated brass/stainless stell	黄铜镀镍/不锈钢 Nickel plated brass/stainless stell	
	外壳	Enclosure	黄铜镀镍/不锈钢 Nickel plated brass/stainless stell	黄铜镀镍/不锈钢 Nickel plated brass/stainless stell	
	基座	Base	PA66	PA66	
灯珠参数 LED Parameters	灯珠类型	LED type	环形带灯Ring Illuminated(LED)	环形带灯Ring Illuminated(LED)	
	额定电压	Rated voltage	6V/12V/24V/110V/220V	6V/12V/24V/110V/220V	
	灯珠颜色	LED color	R O Y G B W	R O Y G B W	
	灯珠寿命	LED life	40000小时hours	40000小时hours	