ezitown
ELECTRIC SOLUTIONS

SC(B) CAST RESIN DRY TYPE TRANSFORMER

Seiko makes perfect quality

SC(B)

Leading in the sales of Cast Resin Dry Type Transformer industry.

ezitown
ELECTRIC SOLUTIONS

10KV SC(B) CAST RESIN DRY TYPE TRANSFORMER

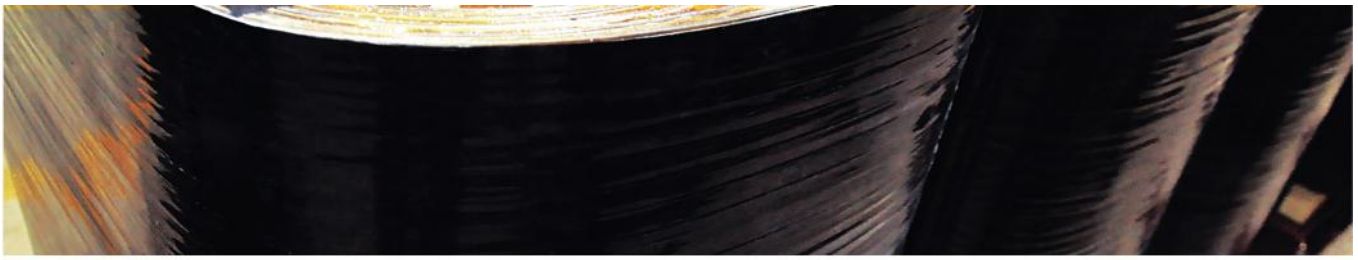

Safe, Reliable, Convenient

Low loss, low partial discharge, low noise, strong capacity of hear emission;

150% operation under force air condition;

Excellent moisture proof to operation under 100% humidity;

Safe, flameproof, no pollution, It can be installed directly in the load center;

Maintenance free, easy installation, low cost.

ezitown
ELECTRIC SOLUTIONS

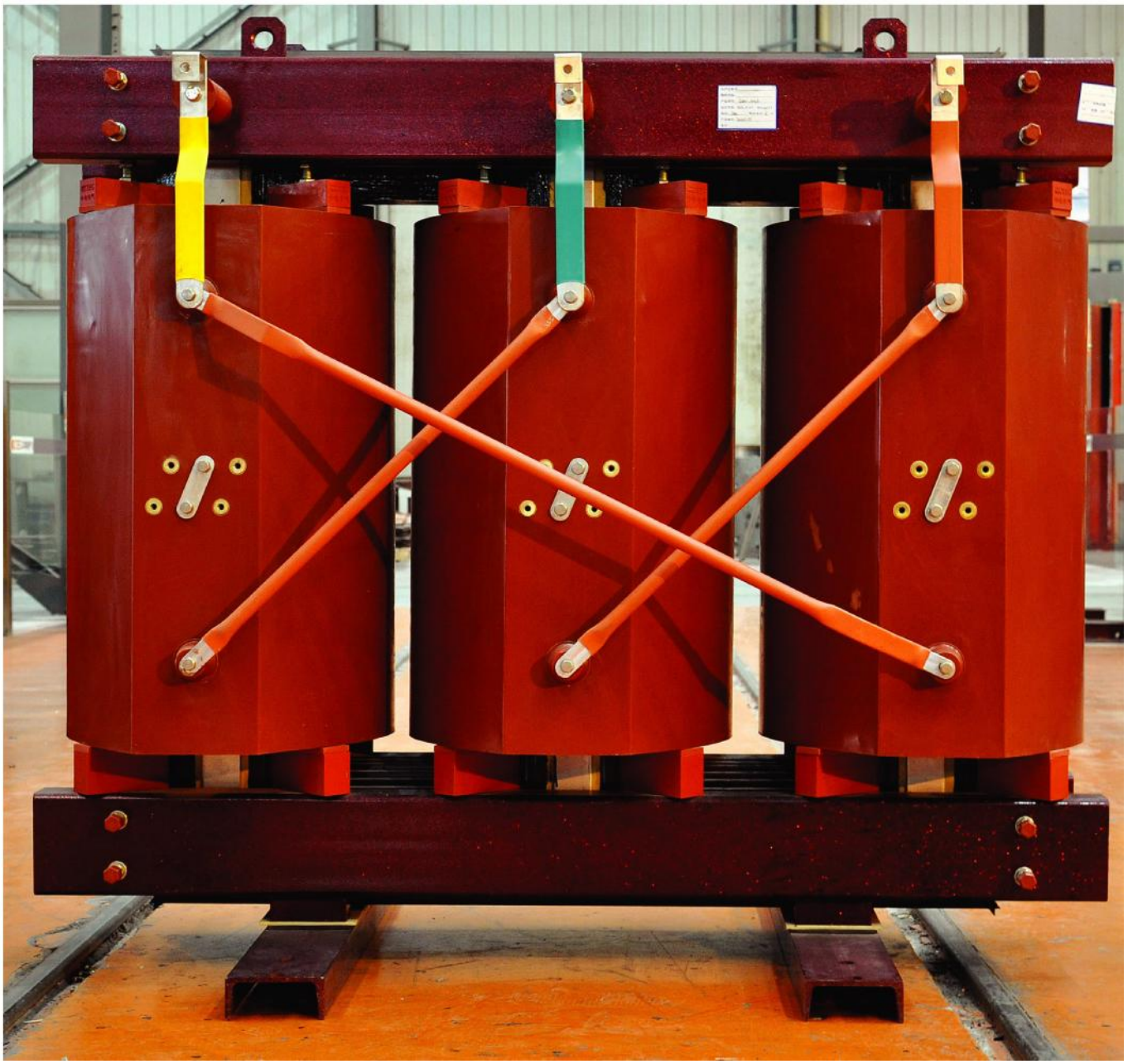

ezitown
ELECTRIC SOLUTIONS

CHARACTERISTICS

45°all-learning stepping joints iron core

The iron core is manufactured with imported high quality grain-oriented cold rolled silicon steel of high magnetic conductivity, and 45°all-learning stepping joints; the special square tube and draw plate are used here, and the core column is fixed by the insulated tape; Its surface is covered with special resin in order to avoid moisture or rust, which can effectively reduce no-load current and noise of the iron core.

Multi-layer sectional cylindrical HV coil

High voltage coil is manufactured with Grade-F insulation copper wire, reinforce with long or short glass fiber felt as stuffing and being cast with epoxy resin at vacuum state (1-3 mbar) which can restrain the partial discharge effectively not to exceed 5PC.

Vertical duct foil type LV coil

The low voltage winding is manufactured in the foil type by the automatic foil winding machine, the internal welding is conducted on the winding machine with argon protection which is characterized by high precision and small welding resistance without eternal welding points. DMD laminated foil presoaked with the epoxy resin are used for layer insulation, the body of the device are enclosed with resin at its both ends and them put it in the curing furnace to make it strong.

Solid protection casing with good appearance

The IP20 casing can prevent solid material which diameter is more than 12mm from getting in and withstand accidental shock, besides the function owned by the casing; The IP23 can stop water drops drop from an angle of 60° with the vertical line flowing in it, so it suitable for outdoor installation.

Perfect temperature protection and control device

Over-temperature protection devices realize their temperature detection & control mainly through PT thermally sensitive resistors prearranged in the low voltage coil. Display itinerantly the instant temperature values of three-phase windings during the operation of the transformer, alarm or trip whenever the regulated temperature is beyond normal; alarm or sound and light and the start the cooling fan; equipped with over-load protection of cooling fan and the computer interface.

ezitown
ELECTRIC SOLUTIONS

MODEL DESCRIPTIONS

Model Descriptions Of Cast Resin Dry Type Transformer

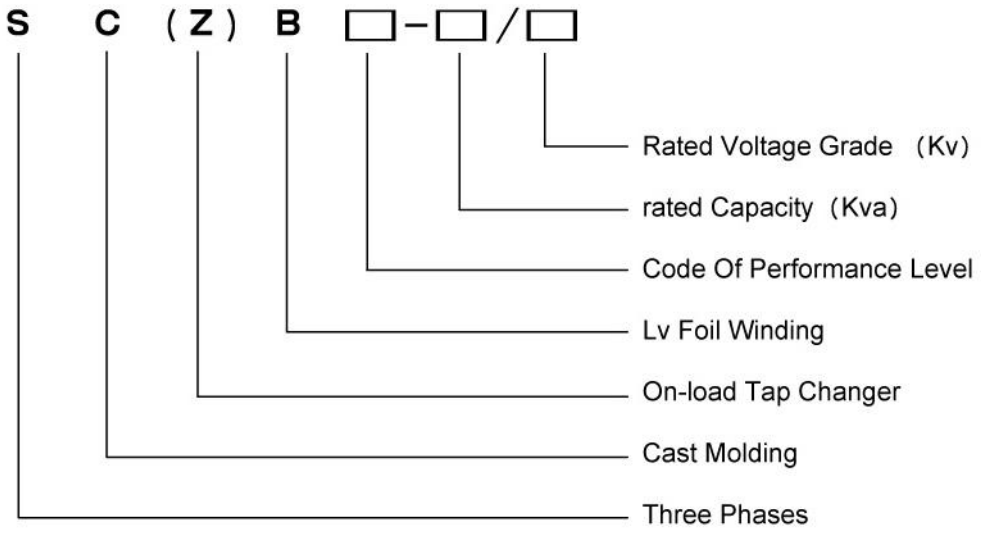

TECHNICAL PARAMETERS

Grade-F Insulation SC(B)9-30～3150/10
Rated HV: 10（10.5，11，6.6，6.3，6）kV
Rated LV: 0.4kV

Vector group: DYN11 or YYN0
Insulation Level: LI75AC35/AC3

Type	Uk%	no-load loss	on-load loss (75℃)	I0%	LPA(AN)dB	Dimensions (mm)							Weight kg	LV Terminal
SC9-30/10	4	216	655	1.4	44	880×600×875	400	400	300	160	263	223	545	(a)
SC9-50/10	4	305	790	1.2	44	950×750×915	550	550	325	170	271	229	680	(a)
SC9-80/10	4	415	1180	1	44	1000×750×977	550	550	340	180	280	255	720	(a)
SC9-100/10	4	450	1420	0.8	44	1030×750×1006	550	550	350	190	293	260	900	(a)
SC9-125/10	4	530	1700	0.8	44	1060×750×1033	550	550	360	190	300	290	1000	(a)
SC9-160/10	4	610	1960	0.7	44	1080×750×1123	550	550	365	190	295	295	1145	(a)
SC9-200/10	4	700	2240	0.7	46	1100×860×1160	550	550	370	200	305	295	1275	(a)
SC9-250/10	4	810	2550	0.7	46	1130×860×1262	660	660	380	200	310	300	1430	(a)
SCB9-315/10	4	990	2800	0.7	48	1220×860×1126	660	660	420	120	294.5	264.5	1495	(b)
SCB9-400/10	4	1100	3680	0.7	48	1238×860×1195	660	660	425	120	293.5	264.5	1600	(b)
SCB9-500/10	4	1305	4514	0.6	50	1256×860×1230	820	820	430	120	300.5	270	1900	(c)
SCB9-630/10	4	1510	5100	0.6	50	1380×860×1265	820	660	470	145	330	332	2345	(c)
SCB9-630/10	6	1460	5509	0.6	51	1405×860×1260	820	660	480	135	318	322	2375	(c)
SCB9-800/10	6	1710	6426	0.6	51	1425×1020×1385	820	820	485	165	322.5	323.5	2865	(d)
SCB9-1000/10	6	1990	7030	0.5	51	1525×1070×1465	820	820	515	145	335	333	3245	(d)
SCB9-1250/10	6	2350	8958	0.5	53	1580×1270×1597	820	820	540	185	333	339	3610	(e)
SCB9-1600/10	6	2755	10826	0.4	53	1658×1270×1662	1070	1070	565	185	339	346	3925	(e)
SCB9-2000/10	6	3400	13400	0.4	53	1805×1270×1940	1070	1070	615	205	357	363	5160	(f)
SCB9-2500/10	6	4000	15300	0.4	55	1890×1270×2020	1070	1070	640	205	380	393	6135	(f)
SCB9-3150/10	6	5000	21000	0.3	56	2050×1270×2256	1070	1070	695	260	420.5	388.5	7085	(g)

Dimensions

10kV 30～3150kVA Distribution Transformer

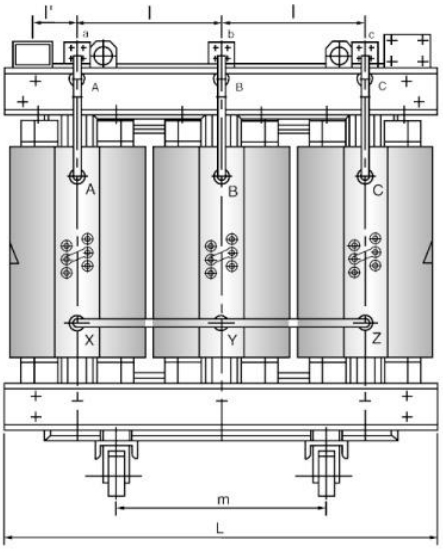

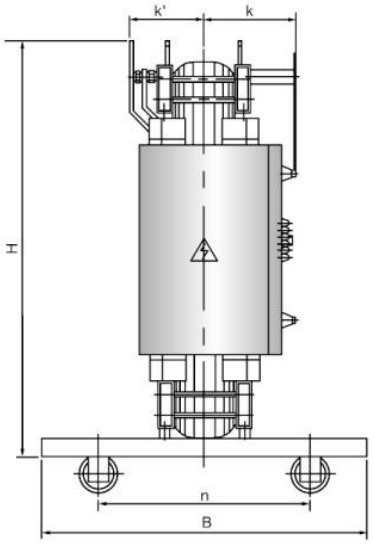

LV Connection Terminal Bus Bar

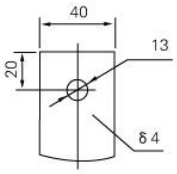

(a) 300A/100-250kVA

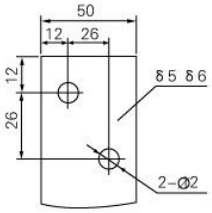

(b) 600A/315-400kVA

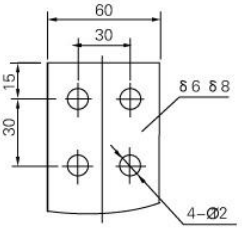

(c) 1000A/500-630kVA

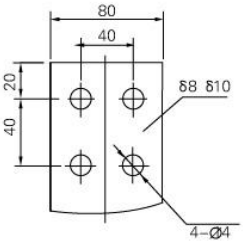

(d) 1500A/800-1000kVA

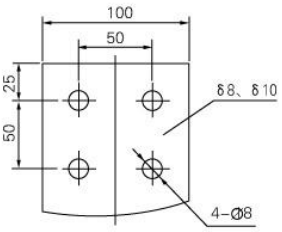

(e) 2500A/1250-1600kVA

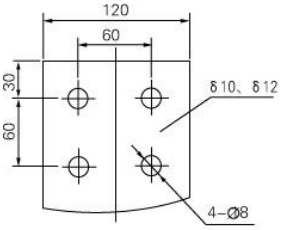

(f) 4000A/2000-2500kVA

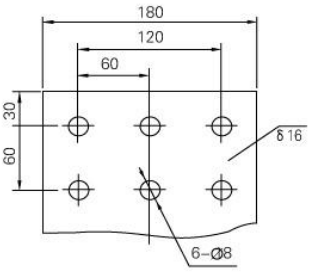

(g) 5000A/3150-4000kVA

Note: Dimensions and data supplied in this manual is only for type selection and design reference; the ultimate dimension should be subjected to actual drawings of the products.

ezitown
ELECTRIC SOLUTIONS

TECHNICAL PARAMETERS

Grade F Insulation SC(B)10-30～4000/10

Rated HV: 10（10.5，11，6.6，6.3，6）kV
Rated LV: 0.4kV

Vector group: DYN11 or YYN0
Insulation Level: LI75AC35/AC3

Type	Uk%	no-load loss	on-load loss (75℃)	I0%	LPA(AN)dB	Dimensions (mm)							Weight kg	LV Terminal
SC10-30/10	4	190	615	1.4	42	880×600×875	400	400	300	160	263	223	600	(a)
SC10-50/10	4	270	870	1.4	42	950×750×915	550	550	325	170	271	229	755	(a)
SC10-80/10	4	370	1205	0.8	42	1000×750×977	550	550	340	180	280	255	800	(a)
SC10-100/10	4	400	1370	0.7	42	1030×750×1006	550	550	350	190	293	260	1010	(a)
SC10-125/10	4	470	1610	0.7	43	1060×750×1033	550	550	360	190	300	290	1125	(a)
SC10-160/10	4	545	1850	0.7	43	1080×750×1123	550	550	365	190	295	295	1285	(a)
SC10-200/10	4	625	2200	0.7	43	1100×860×1160	550	550	370	200	305	295	1440	(a)
SC10-250/10	4	720	2400	0.7	43	1130×860×1262	660	660	380	200	310	300	1615	(a)
SCB10-315/10	4	880	3020	0.7	45	1220×860×1126	660	660	430	120	294.5	264.5	1645	(b)
SCB10-400/10	4	975	3480	0.7	45	1238×860×1195	660	660	420	120	293.5	264.5	1855	(b)
SCB10-500/10	4	1160	4260	0.6	46	1256×860×1230	660	660	430	120	300.5	270	1900	(c)
SCB10-630/10	4	1345	5120	0.6	46	1380×860×1265	820	660	470	145	330	332	2665	(c)
SCB10-630/10	6	1300	5200	0.6	48	1420×860×1260	820	660	480	135	321	322	2345	(c)
SCB10-800/10	6	1520	6020	0.5	49	1445×1020×1385	820	820	485	165	387.5	323.5	3255	(d)
SCB10-1000/10	6	1770	7090	0.4	50	1500×1070×1481	820	820	510	165	335.5	333	3690	(d)
SCB10-1250/10	6	2090	8460	0.4	51	1625×1270×1610	820	820	555	185	333	339	3820	(e)
SCB10-1600/10	6	2450	10240	0.3	51	1675×1270×1660	1070	1070	570	185	338	345	4470	(e)
SCB10-2000/10	6	3050	12600	0.3	52	1805×1270×1940	1070	1070	615	205	357	363	5855	(f)
SCB10-2500/10	6	3600	15000	0.3	53	1945×1270×1985	1070	1070	660	205	378.5	394.5	7005	(f)
SCB10-3150/10	6	4500	21000	0.3	55	2050×1270×2250	1070	1070	695	260	420.5	388.5	7625	(g)
SCB10-4000/10	6	5500	23000	0.3	56	2175×1400×2256	1070	1070	735	255	460	410	8870	(g)

Note: Dimensions and data supplied in this manual is only for type selection and design reference; the ultimate dimension should be subjected to actual drawings of the products.

Remarks:
Grade H Insulation Epoxy Casting Transformer can be provided with Grade H Epoxy Resin Casting and Grade H Insulation material (intensifying insulation paint),). the The temperature rising rise limit is 125K and design temperature value is 100K, . all togetherThis improves the over-load ability capacity and lifespan of the transformers significantly. Parameters such as loss and outside dimensions are in accordance with those of Grade F.

ezitown
ELECTRIC SOLUTIONS

TECHNICAL PARAMETERS

Grade F Insulation SC(B)11-30～3150/10

Rated HV: 10（10.5，11，6.6，6.3，6）kV
Rated LV: 0.4kV

Vector group: DYN11 or YYN0
Insulation Level: LI75AC35/AC3

Type	Uk%	no-load loss P0(W)	on-load loss (75℃) Pk(W)	I0%	LPA(AN)dB	Dimensions (mm)							Weight kg	LV Terminal
		11type	11type			L×B×H	m	n	l	l_1	k	k_1	kg	
SC11-30/10	4	170	585	1.4	42	960×600×890	400	400	300	160	263	223	600	(a)
SC11-50/10	4	245	825	1.4	42	1020×750×920	550	550	325	170	271	229	755	(a)
SC11-80/10	4	330	1145	0.8	42	1060×750×990	550	550	340	180	280	255	800	(a)
SC11-100/10	4	360	1300	0.7	42	1100×750×1050	550	550	350	190	293	260	1010	(a)
SC11-125/10	4	420	1530	0.7	43	1120×750×1055	550	550	360	190	300	290	1125	(a)
SC11-160/10	4	490	1760	0.7	43	1150×750×1160	550	550	365	190	295	295	1285	(a)
SC11-200/10	4	565	2090	0.7	43	1180×860×1170	550	550	370	200	305	295	1440	(a)
SC11-250/10	4	650	2280	0.7	43	1210×860×1210	660	660	380	200	310	300	1615	(a)
SCB11-315/10	4	790	2870	0.7	45	1250×860×1220	660	660	430	120	294.5	264.5	1645	(b)
SCB11-400/10	4	880	3300	0.7	45	1260×860×1250	660	660	420	120	293.5	264.5	1855	(b)
SCB11-500/10	4	1045	4050	0.6	46	1440×860×1340	660	660	430	120	300.5	270	1900	(c)
SCB11-630/10	4	1210	4860	0.6	46	1450×860×1290	820	660	470	145	330	332	2665	(c)
SCB11-630/10	6	1170	4940	0.6	48	1420×860×1310	820	660	480	135	321	322	2345	(c)
SCB11-800/10	6	1370	5720	0.5	49	1535×1020×1476	820	820	485	165	387.5	323.5	3255	(d)
SCB11-1000/10	6	1600	6740	0.4	50	1540×1070×1540	820	820	510	165	335.5	333	3690	(d)
SCB11-1250/10	6	1880	8040	0.4	51	1710×1270×1705	820	820	555	185	333	339	3820	(e)
SCB11-1600/10	6	2200	9730	0.3	51	1780×1270×1745	1070	1070	570	185	338	345	4470	(e)
SCB11-2000/10	6	2745	11970	0.3	52	1890×1270×2100	1070	1070	615	205	357	363	5855	(f)
SCB11-2500/10	6	3240	14250	0.3	53	2050×1270×2130	1070	1070	660	205	378.5	394.5	7005	(f)
SCB11-3150/10	6	4100	19950	0.3	55	2150×1270×2250	1070	1070	695	260	420.5	388.5	7625	(g)

Note: Dimensions and data supplied in this manual is only for type selection and design reference; the ultimate dimension should be subjected to actual drawings of the products.

Remarks:
Grade H Insulation Epoxy Casting Transformer can be provided with Grade H Epoxy Resin Casting and Grade H Insulation material (intensifying insulation paint),). the The temperature rising rise limit is 125K and design temperature value is 100K, . all togetherThis improves the over-load ability capacity and lifespan of the transformers significantly. Parameters such as loss and outside dimensions are in accordance with those of Grade F.

ezitown
ELECTRIC SOLUTIONS

TECHNICAL PARAMETERS

SCZB10 Series 10kV Grade 315-2500kVA load-ratio voltage distributing transformer

1. When network voltage vibrates, voltage adjustment of the transformer must be made to provide high quality and steady voltage;.
2. ReliablReliabilitye and continuous power supply are much important for users, and the application of the transformer becomes more and more popular;.
3. Integrated design of this transformer is of compact structure, less occupation of room and convenient installation;.
4. On-load tap changer adopts dry vacuum casing structure, and consists of eleltricelectric mechanism, vacuum changing switch with transitional resistance and tapping selector;.
5. Equipped with automatic controller, On-load tap changer is easy for operations of present and remote control, and computer connector could be provided according to customers'demands;request.
6. Transformers with other kinds of on-load taps could also be designed and installed.

Rated HV: 10(10.5,11,6.6,6,6.3)kV/ 0.4kV
Tapping range: ±4×2.5% (9Tapping)
Vector group: DYN11 or YYN0
Insulation Level: LI75AC35/AC3

Type	no-load loss	on-load loss (75℃)	Uk(%)	Io(%)	LpA(dB)	Dimensions (mm)									Weight kg	LV Terminal
	Po(W)	Pk(W)				L×B×H	m	n	l	l'	k	k'	h	B2	kg	
SCZB10-315/10	880	3050	4	0.7	46	1220×860×1126	660	660	420	120	294.5	264.5	1060	1480	2005	(b)
SCZB10-400/10	970	3590	4	0.7	47	1238×860×1195	660	660	425	120	293.5	264.5	1130	1480	2215	(b)
SCZB10-500/10	1160	4500	4	0.6	47	1300×860×1230	660	660	430	120	300.5	270	1160	1480	2515	(c)
SCZB10-630/10	1345	5260	4	0.6	48	1405×860×1265	820	660	480	135	330	332	1210	1480	3025	(c)
SCZB10-630/10	1300	5370	6	0.6	48	1420×860×1260	820	660	485	135	321	322	1176	1480	3060	(c)
SCZB10-800/10	1520	6270	6	0.5	49	1445×1020×1385	820	820	495	165	322.5	323.5	1275	1580	3615	(d)
SCZB10-1000/10	1770	7290	6	0.4	50	1525×1070×1465	820	820	520	165	335	336.5	1380	1650	3870	(d)
SCZB10-1250/10	2090	8660	6	0.4	51	1645×1270×1610	820	820	555	185	333	339	1500	1670	4180	(e)
SCZB10-1600/10	2450	10440	6	0.3	51	1675×1270×1660	1070	1070	565	185	339	346	1541	1800	4830	(e)
SCZB10-2000/10	3320	12800	6	0.3	52	1805×1270×1940	1070	1070	615	205	357	363	1805	1850	6215	(f)
SCZB10-2500/10	3960	15210	6	0.3	53	1890×1270×2020	1070	1070	640	205	380	393	1920	1850	7365	(f)

Notes:
1.HithHigh voltage and low voltage terminal within load-ratio transformer is the same with those within no-excitation voltage transformer of the same volume.;
2.On-load products with shell have gates in three sides except the side of on-load switch.;
3.When a load-ratio transformer operates in parallel, it must be equipped with synchronous controller, and the number of transformers operating in parallel can not exceed 4.;
4.Note: the Dimensions and data supplied in this manual is only for type selection and design reference only; the ultimate dimension should be subjected to actual drawings of products.
5.L1×B1×H1 is the outside dimension of on-load tap, which is decided by manufacturer.

ezitown
ELECTRIC SOLUTIONS

Dimensions

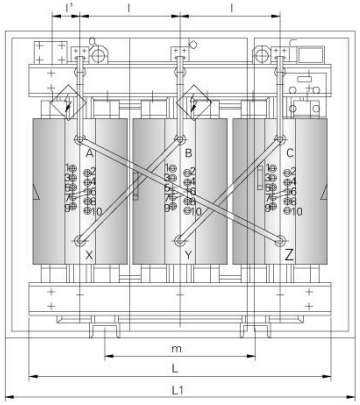

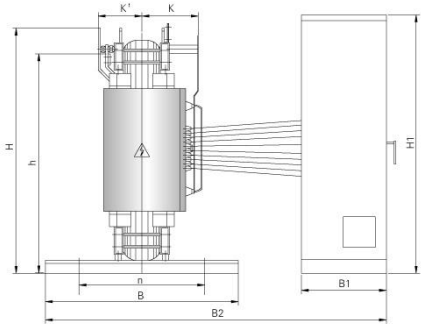

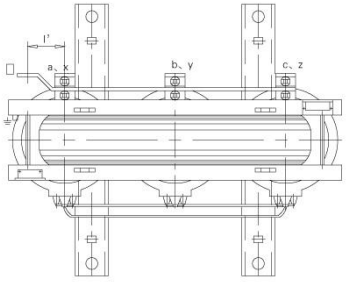

TECHNICAL PARAMETERS

10kV Grade 630~8000kVA power transformer

Rated HV: 10(11,10.5,6.6,6.3,6,3.15)kV
Rated LV: 6.6,6.3,6,3.15,3kV

Vector group: Yd11 or YNd11、Dyn11
Insulation Level: LI75AC35/LI75AC35

Type	Po(W)	Pk(75℃)	Uk%	Io%	LpdB(A)	Dimensions (mm)									Weight kg	LV Terminal
						L	B	H	m	n	l	l'	k	k'	kg	
SC10-630/10	1440	5557	6	1.0	55	1490	1170	1345	820	820	505	205	325	295	2665	(a)
SC10-800/10	1620	6635	6	1.0	56	1630	1250	1402	820	820	555	225	329	329	3065	(a)
SC10-1000/10	1944	7420	6	0.8	56	1750	1270	1396	1070	1070	595	240	363	334	3375	(a)
SC10-1250/10	2250	9150	6	0.8	57	1735	1270	1636	1070	1070	590	237	491	461	3380	(a)
SC10-1600/10	2750	10850	6	0.7	57	1830	1320	1677	1070	1070	620	260	379	349	4505	(a)
SC10-2000/10	3600	13210	6	0.7	58	1870	1270	1796	1070	1070	635	265	381.5	352.5	5460	(b)
SC10-2500/10	4000	15800	6	0.6	58	2050	1270	1807	1070	1070	695	295	416	386	6270	(b)
SC10-3150/10	4700	18247	6	0.5	59	2110	1370	1910	1070	1300	710	310	430	400	7745	(b)
SC10-4000/10	5500	21979	7	0.5	60	2340	1370	1950	1070	1300	790	340	440	410	9000	(b)
SC10-5000/10	6200	25960	7	0.3	63	2560	1800	2280	1475	1475	850	350	516	606	12500	(b)
SC10-6300/10	7500	30854	7	0.3	65	2760	1800	2360	1475	1475	925	400	526.5	609	14500	(b)
SC10-8000/10	9500	41900	9	0.3	68	2920	1800	2550	1475	1475	980	440	527	618	16200	(b)

ZSCB10 series 10kVgrade 400-4000kVA rectifier transformer

Type	UK%	no-load loss	on-load loss (120℃)	10%	LPA(AN)dB	L×B×H(itself)	m	n	Weight kg
ZSC10-400/10/0.69/0.69	4.50%	1800	3500	1.2	46	1560×860×1430	660	660	2300
ZSC10-500/10/0.69/0.69	4.50%	1900	4000	0.6	48	1600×860×1490	660	660	2600
ZSC10-630/10/0.69/0.69	4.50%	2000	6880	0.9	50	1660×1020×1600	820	820	3000
ZSCB10-800/10/0.69/0.69	5%	2180	7600	0.8	52	1680×1020×1690	820	820	3200
ZSCB10-1000/10/0.69/0.69	6%	2300	8900	0.7	54	1700×1070×1825	820	820	3800
ZSCB10-1250/10/0.69/0.69	6%	2480	10500	0.5	56	1760×1070×1825	820	820	4200
ZSCB10-1600/10/0.44/0.44	6%	2755	13891	0.4	56	1800×1070×2136	820	820	5075
ZSCB10-2500/10/0.69/0.69	6%	3590	16784	0.3	58	1920×1270×2136	1070	1070	6255
ZSCB9-3150/10/0.53/0.53	7%	4067	18890	0.3	60	2060×1270×2537	1070	1070	7660
ZSCB10-3150/10/0.69/0.69	8%	5090	16862	0.3	60	2250×1270×2398	1070	1070	8600
ZSCB9-3300/10/0.69/0.69	8%	5090	18470	0.3	62	2250×1270×2398	1070	1070	8600
ZSCB10-4000/10/0.66/0.66	8%	5025	24300	0.3	65	2185×1270×2553	1070	1070	9425
ZSCB10-4000/10/0.66/0.66	6%	5580	20368	0.3	65	2210×1270×2598	1070	1070	10360

Note: Dimensions and data supplied in this manual is only for type selection and design reference; the ultimate dimension should be subjected to actual drawings of the products.

ezitown
ELECTRIC SOLUTIONS

20kV grade 800～20000kVA non-excitation voltage regulating power transformer

Rated capacity kVA	Voltage coupling and tapping range			Vector group symbol	No-load loss kW	On-load loss kW		No-load current %	Short-circuit resistance %	Noise grade LpDB(A)
	HV kV	HV Tapping Range%	LV kV			75℃	100℃			
800	13.8、15.75 18、20、22、24		3、3.15、6、6.3 6.6、10、10.5、11	Yd11or YNd11	2300	7640	8750	1.5	6	52
1000	13.8、15.75 18、20、22、24		3、3.15、6、6.3 6.6、10、10.5、11	Yd11or YNd11	2500	9690	11100	1.5	6	52
1250	13.8、15.75 18、20、22、24		3、3.15、6、6.3 6.6、10、10.5、11	Yd11or YNd11	3100	11790	13500	1.3	6	52
1600	13.8、15.75 18、20、22、24		3、3.15、6、6.3 6.6、10、10.5、11	Yd11or YNd11	3630	13800	15800	1.3	6	54
2000	13.8、15.75 18、20、22、24		3、3.15、6、6.3 6.6、10、10.5、11	Yd11or YNd11	4240	15800	18100	1.1	7	55
2500	13.8、15.75 18、20、22、24		3、3.15、6、6.3 6.6、10、10.5、11	Yd11or YNd11	4850	18160	20800	1.1	7	55
3150	13.8、15.75 18、20、22、24		3、3.15、6、6.3 6.6、10、10.5、11	Yd11or YNd11	6160	21830	25000	0.9	8	56
4000	13.8、15.75 18、20、22、24		3、3.15、6、6.3 6.6、10、10.5、11	Yd11or YNd11	6930	25320	29000	0.9	8	56
5000	13.8、15.75 18、20、22、24		3、3.15、6、6.3 6.6、10、10.5、11	Yd11or YNd11	7810	28990	33200	0.7	8	58
6300	13.8、15.75 18、20、22、24		3、3.15、6、6.3 6.6、10、10.5、11	Yd11or YNd11	9980	33960	38900	0.7	8	60
8000	13.8、15.75 18、20、22、24		3、3.15、6、6.3 6.6、10、10.5、11	Yd11or YNd11	12280	38420	44000	0.6	8	60
10000	13.8、15.75 18、20、22、24		3、3.15、6、6.3 6.6、10、10.5、11	Yd11or YNd11	14410	43650	50000	0.6	8	62
12500	13.8、15.75 18、20、22、24		3、3.15、6、6.3 6.6、10、10.5、11	Yd11or YNd11	18150	47150	54000	0.6	8	63
16000	13.8、15.75 18、20、22、24		3、3.15、6、6.3 6.6、10、10.5、11	Yd11or YNd11	22660	53260	61000	0.5	8	64
20000	13.8、15.75 18、20、22、24		3、3.15、6、6.3 6.6、10、10.5、11	Yd11or YNd11	27170	62430	71500	0.5	8	65

Notes: HV Tapping range of ±2×2.5% can be provided according to the requirements of city electrical machines

10kV～20kV Interchangeable Dsitribution Transformer

Rated HV: 20（24,22,20,18,15.75,15,13.8）kV　　Vector group: DYN11 or YyN0
Rated LV: 0.4kV　　Insulation Level: LI125AC50/AC3

Type	Uk%	No-load loss	On-load loss (75℃)	I0%	LPA(AN)dB	Dimensions（mm）							Weight kg	LV Terminal
		P0(W)	Pk(W)			L×B×H	m	n	l	l^1	k	k^1	kg	
SCB10-250/20	6	840	2900	1.0	47	1420×1020×1218	820	660	490	120	268.5	380.5	2015	(a)
SCB10-315/20	6	970	3570	0.9	48	1470×1020×1405	820	820	510	145	387	304	2475	(b)
SCB10-400/20	6	1150	4230	0.8	48	1550×1070×1470	820	820	535	145	407	324	2540	(c)
SCB10-500/20	6	1350	5060	0.8	50	1550×1070×1550	820	820	535	145	416	338	2810	(c)
SCB10-630/20	6	1530	5970	0.7	50	1560×1070×1542	820	820	540	165	413.5	326.5	2650	(d)
SCB10-800/20	6	1755	7215	0.6	51	1645×1070×1657	820	820	565	178	420	339	3545	(d)
SCB10-1000/20	6	2070	8545	0.5	52	1700×1070×1725	820	820	600	200	430.5	347	3980	(e)
SCB10-1250/20	6	2385	10080	0.5	52	1790×1270×1807	1070	1070	615	190	439	351	4310	(e)
SCB10-1600/20	6	2790	12100	0.4	53	1900×1270×1940	1070	1070	650	205	451.5	365	5080	(e)
SCB10-2000/20	6	3240	14300	0.4	53	1980×1270×2042	1070	1070	680	205	479.5	391	6060	(f)
SCB10-2500/20	6	3870	16920	0.3	54	2055×1270×2250	1070	1070	710	215	485.5	396.5	7057	(f)

Note: Dimensions and data supplied in this manual is only for type selection and design reference; the ultimate dimension should be subjected to actual drawings of the products.

10kV～20kV Interchangeable Dsitribution Transformer

Grade-H Insulation 10kV～20kV Interchangeable 250～2500kVA Distribution Transformer

Rated HV: 20（10）kV　　Vector group: DYN11 or YyN0
Rated LV: 0.4kV　　Insulation Level: LI125AC50/AC3

Type	Uk%	No-load loss	On-load loss (75℃)	I0%	LPA	Dimensions（mm）							Weight kg	LV Terminal
		P0(W)	Pk(W)			L×B×H	m	n	l	l^1	k	k^1	kg	
SCB10-250/20(10)	6	840	2900	1.0	47	1420×1020×1218	820	660	490	120	268.5	380.5	2015	(a)
SCB10-315/20(10)	6	970	3570	0.9	48	1470×1020×1405	820	820	510	145	387	304	2475	(b)
SCB10-400/20(10)	6	1150	4230	0.8	48	1550×1070×1470	820	820	535	145	407	324	2540	(c)
SCB10-500/20(10)	6	1350	5060	0.8	50	1550×1070×1550	820	820	535	145	416	338	2810	(c)
SCB10-630/20(10)	6	1530	5970	0.7	50	1560×1070×1542	820	820	540	165	413.5	326.5	2650	(d)
SCB10-800/20(10)	6	1755	7215	0.6	51	1645×1070×1657	820	820	565	178	420	339	3545	(d)
SCB10-1000/20(10)	6	2070	8545	0.5	52	1700×1070×1725	820	820	600	200	430.5	347	3980	(e)
SCB10-1250/20(10)	6	2385	10080	0.5	52	1790×1270×1807	1070	1070	615	190	439	351	4310	(e)
SCB10-1600/20(10)	6	2790	12100	0.4	53	1900×1270×1940	1070	1070	650	205	451.5	365	5080	(e)
SCB10-2000/20(10)	6	3240	14300	0.4	53	1980×1270×2042	1070	1070	680	205	479.5	391	6060	(f)
SCB10-2500/20(10)	6	3870	16920	0.3	54	2055×1270×2250	1070	1070	710	215	485.5	396.5	7057	(f)

Note: Dimensions and data supplied in this manual is only for type selection and design reference; the ultimate dimension should be subjected to actual drawings of the products.

ezitown
ELECTRIC SOLUTIONS

35KV Transformer

Applicable site: substations in narrow urban areas with high population density

- Casted by nontoxic and flame-proof epoxy resin with high intensity;
- Strong short-circuit resistance ability, low loss and no-load current, and strong impact-resistant and low noise;.
- Great overload ability. The transformer could run with 120% overload without cooling fun for long period of time;.
- With good insulated heat-resistant performance, and could withstand temperatures at as high as 180℃.

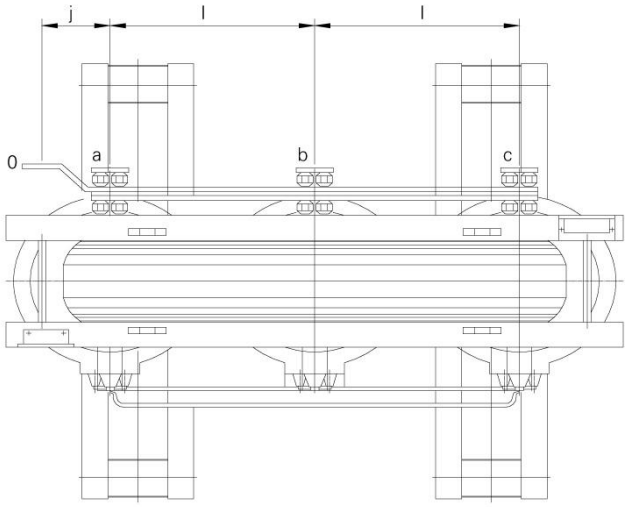

Dimensions

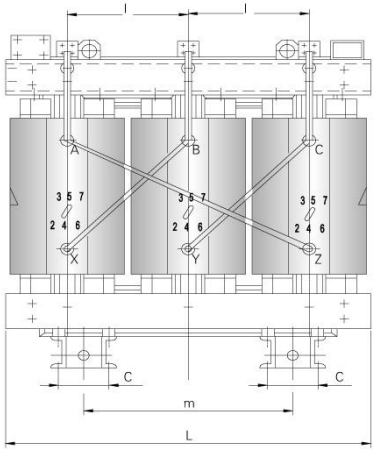

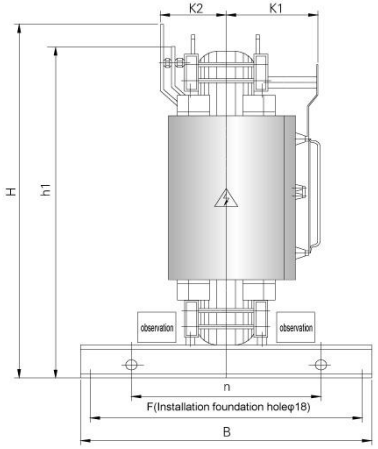

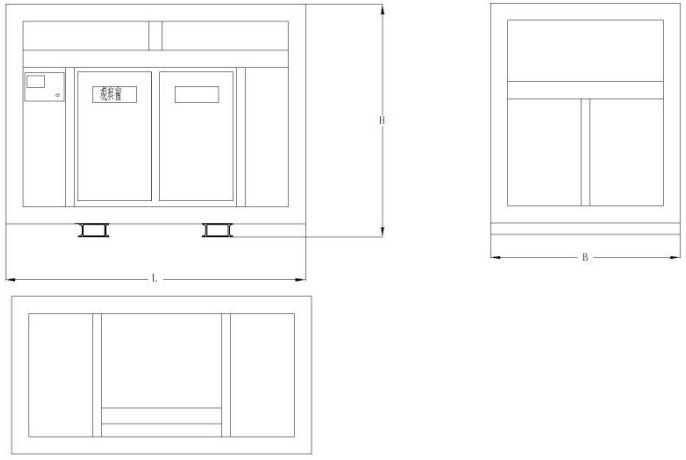

TECHNICAL PARAMETERS

SC(B)10-50～3150/35
Rated HV: 35（38.5，37.5，36.5，33）kV　　Vector group: Yyn0，Dyn11
Rated LV: 0.4kV　　Insulation Level: LI170AC70/AC3

Type	ZK%	no-load loss	on-load loss (75℃)	Io%	LPAN dB	Dimensions (mm)									Weight kg	Shell Dimensions L*B*H
						L*B*H	m	n	l	K1	K2	F	C	j		
SC10-50/35	6	540	1121	2.2	50	1425*900*1270	660	660	505	500	266	820	0	180	700	2230*1700*1700
SC10-100/35	6	690	1647	0.6	50	1400*1000*1670	660	660	490	500	260	920	0	128	1100	2250*1700*2000
SC10-160/35	6	875	2995	0.85	51	1470*100*1591	820	820	520	516	282	920	0	165	1250	2300*1700*2000
SC10-200/35	6	920	3314	0.85	51	1470*1000*1591	820	820	520	516	282	920	0	165	1360	2300*1700*2000
SC10-250/35	6	1080	3181	0.73	52	1470*1000*1591	820	820	520	516	282	920	0	165	1460	2300*1700*2000
SC10-315/35	6	1179	3914	0.6	52	1580*1100*1870	660	820	540	632	290	900	90	135	1880	2600*1800*2300
SC10-400/35	6	1530	4792	1.6	52	1790*1100*1700	820	820	625	538	306	1020	0	170	2300	2600*1800*2100
SCB10-500/35	6	1415	5400	0.43	52	1620*1100*1930	820	820	560	533	294	1020	0	190	2400	2420*1800*2300
SCB10-630/35	6	1475	5831	0.36	52	1720*1100*1970	660	820	590	641	302	900	0	181	3000	2520*1900*2350
SCB10-800/35	6	2405	6633	0.63	53	1840*1200*2000	820	820	645	573	345	1120	220	284	3500	2650*1900*2350
SCB10-1000/35	6	2590	9498	0.47	53	2070*1200*1980	1070	820	705	580	361	1120	220	200	4330	2870*1900*2350
SCB10-1250/35	6	3040	10742	0.4	53	2180*1400*2000	1070	1070	745	602	366	1070	213	195	5190	2980*2000*2450
SCB10-1600/35	6	3627	12770	0.3	55	2000*1300*2270	820	1070	685	686	359	1120	0	209	5200	2800*2000*2650
SCB10-2000/35	6	3825	15928	0.28	55	2130*1300*2340	820	1070	720	694	398	1100	110	195	6000	3200*2200*2700
SCB10-2500/35	6	4340	18641	0.52	55	2240*1400*2370	1070	1070	765	634	404	1400	196	260	7000	3000*2000*2700
SCB10-3150/35	6	6219	22180	0.35	58	2885*1500*2385	1470	1070	975	658	443	1420	296	235	11700	3350*2110*2850

Note: Dimensions and data supplied in this manual is only for type selection and design reference; the ultimate dimension should be subjected to actual drawings of the products.

LV Connection Terminal Bus Bar

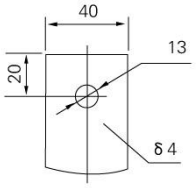

(a)300A
50-250kVA

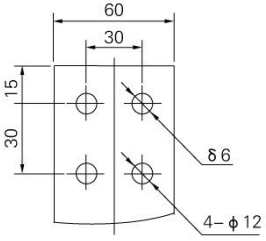

(b)1000A
315-500kVA

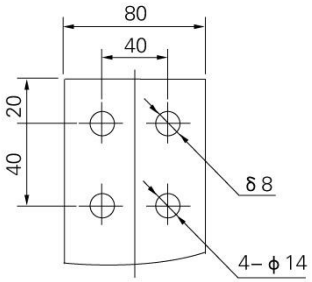

(c)1500A
630-800kVA

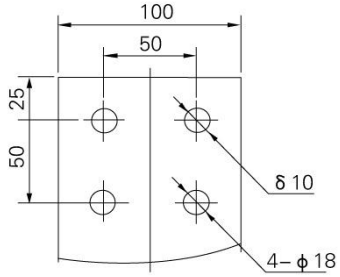

(d)2500A
1000-1250kVA

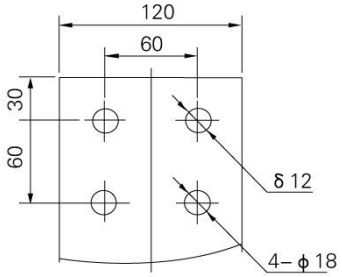

(e)4000A
1600-2500kVA

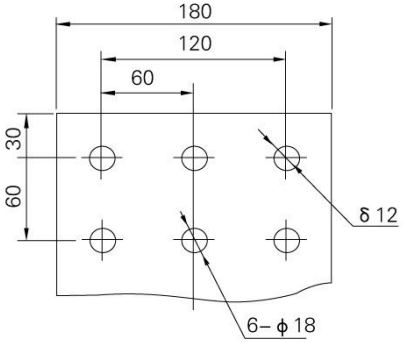

(f)5000A
3150kVA

ezitown
ELECTRIC SOLUTIONS

35KV Transformer

Dimensions

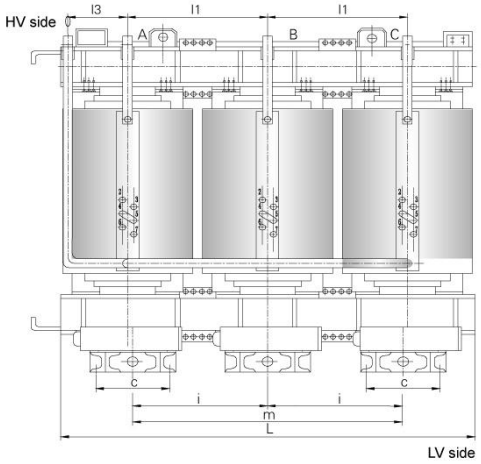

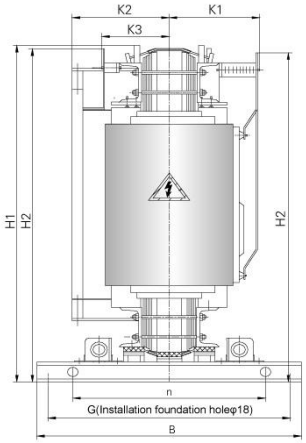

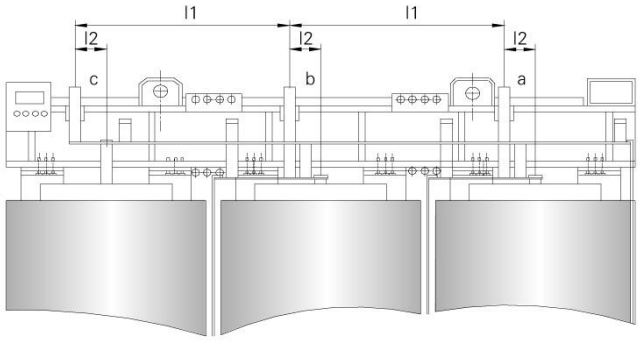

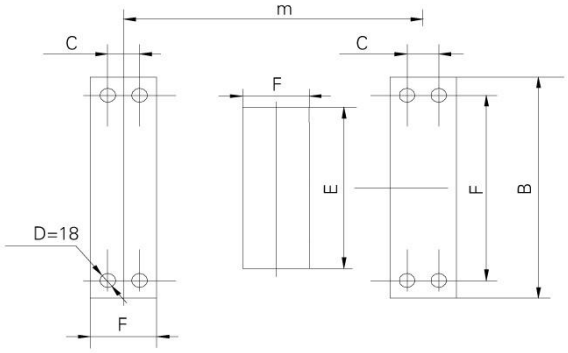

tallation foundation plan

Applicable to:
1.Conditions with heavy seasonal load function or overload;
2.Conditions with strict requirements for fireproof and high security, such as subways, large-scale plazas, petrol or chemical industries, business center, and office building.

TECHNICAL PARAMETERS

SC10-800～25000/35
Rated HV: 35（38.5，37.5，36.5，33）kV
Rated LV: 10.5(11，6.0，6.3，3.15)kV
Vector group: Yd11，YNd11orDyn11
Insulation Level: LI170AC70/AC35

Type	UK%	no-load loss	on-load loss (120℃)	Io%	LPA	Dimensions (mm)															Weight
		Po(W)	Pk(W)		(AN)dB	L×B ×H	m	n	i	C	l_1	l_2	l_3	K_1	K_2	K_3	F	E	G		kg
SC10-800/35	6	2500	9900	0.6	50	2210×1070×1680	1475	820	0	280	790	160	275	569	475	331	330	0	990		4400
SC10-1000/35	6	2970	11500	0.6	50	2280×1070×1720	1475	820	0	280	800	160	300	579	480	341	330	0	990		5200
SC10-1250/35	6	3081	12064	0.5	50	2379×1200×1810	1475	1070	0	280	815	160	335	600	486	370	330	0	1120		6200
SC10-1600/35	6	3623	14301	0.5	50	2405×1400×2285	1475	1070	0	280	830	160	330	615	493	377	330	0	1320		6800
SC10-2000/35	7	4205	16982	0.45	52	2930×1400×2369	1475	1070	0	280	1005	160	420	698	523	458	330	0	1320		9700
SC10-2500/35	7	4792	19958	0.45	52	2650×1400×2345	1475	1070	0	280	910	160	375	640	500	402	330	0	1320		10300
SC10-3150/35	8	5811	23437	0.4	53	2980×1400×2360	2040	1475	0	280	1020	160	430	650	620	411	330	0	1320		11100
SC10-4000/35	8	6936	29298	0.4	53	3220×1600×2410	2040	1475	0	296	1070	160	500	672	543	440	350	0	1520		12200
SC10-5000/35	8	7922	33627	0.35	54	3170×1600×2460	2040	1475	0	296	1080	160	465	685	660	445	350	0	1520		14400
SC10-6300/35	8	9817	40600	0.35	54	3250×1800×2565	2040	1475	1020	296	1110	160	475	695	892	457	350	760	1720		17300
SC10-8000/35	9	11072	47116	0.3	56	3390×1800×2675	2040	1475	1020	296	1155	160	500	706	620	468	350	780	1720		19400
SC10-10000/35	9	12400	53700	0.25	60	3570×2000×2765	2040	1475	1020	296	1220	160	525	735	568	504	350	840	1920		23300
SC10-12500/35	9	14800	56500	0.2	60	3770×2000×2885	2040	1475	1020	296	1285	160	560	740	640	510	350	860	1920		30000
SC10-16000/35	9	18000	65100	0.2	62	3920×2000×2965	2040	1475	1020	296	1340	160	580	754	645	522	350	880	1920		36000
SC10-20000/35	10	21600	74000	0.2	62	4260×2000×3150	2040	1475	1020	296	1450	160	680	769	675	539	350	900	1920		39500

Note: Dimensions and data supplied in this manual is only for type selection and design reference; the ultimate dimension should be subjected to actual drawings of the products.

ezitown
ELECTRIC SOLUTIONS

Dimensions of IP20 outcasing Enclosure of 10Kv 10KV distribution power transformer

(Ways of outlet: lower inlet and upper outlet; & upper inlet and upper outlet &; lower inlet and lower outlet & ; upper inlet and lower outlet)

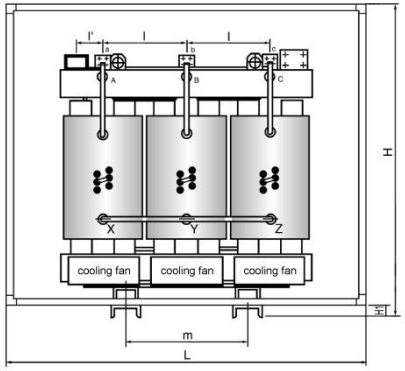

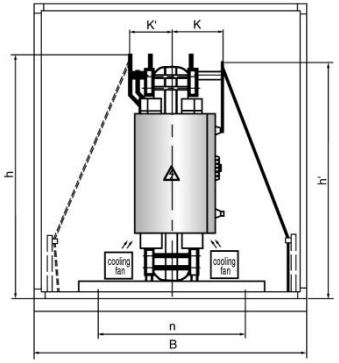

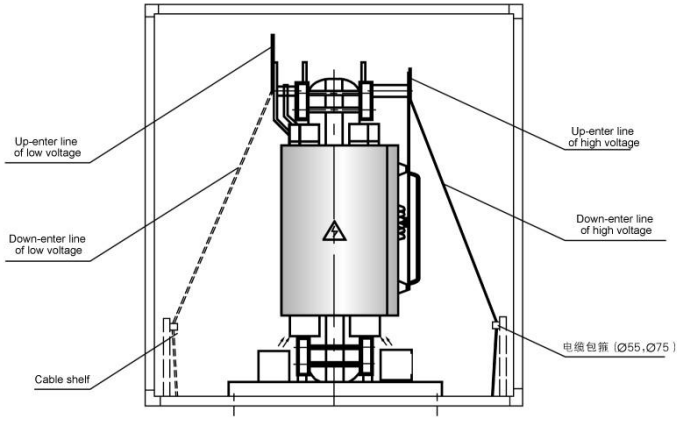

Note: Dimensions and data supplied in this manual is only for type selection and design reference; the ultimate dimension should be subjected to actual drawings of the products.

Characteristics of Transformer with Protective Casing

The beautiful and durable stainless steel enclosure gives extra security protection for power transformer with the degree of IP20 and IP23;
IP 20 casing can prevent solid impurities with a diameter over than 12mm from entering and thus safeguard the live parts;
IP23 can prevent water from falling into the interior in an angular degree of 60, which makes the power transformer more applicable to outdoors operation;
Remarks: An IP23 casing will make the power transformer's cooling capacity decline, decreasing by 5% for that of small capacity and 10% for that of large capacity.

An IP20 requires high-voltage and low-voltage cable incoming (outgoing) feeder carriage, so wiring becomes more convenient;
We are ready to provide you with protective enclosures of special requirements or materials.

TECHNICAL PARAMETERS

Transformer with protective casing

Type	Uk%	Dimensions（mm）								
		L×B×H	m	n	l	l'	h	h'	k	k'
SC9(10)-30/10	4	1500×1000×1560	400	400	300	160	852	862	263	223
SC9(10)-50/10	4	1600×1200×1560	550	550	325	170	912	902	271	229
SC9(10)-80/10	4	1600×1200×1560	550	550	340	180	976	977	280	255
SC9(10)-100/10	4	1600×1200×1560	550	550	350	190	1000	1020	293	260
SC9(10)-125/10	4	1600×1200×1660	550	550	360	190	1047	1057	300	290
SC9(10)-160/10	4	1600×1200×1660	550	550	365	200	1147	1137	295	295
SC9(10)-200/10	4	1700×1200×1710	550	550	370	200	1182	1172	305	295
SC9(10)-250/10	4	1800×1200×1710	660	660	380	135	1262	1253	310	300
SCB9(10)-315/10	4	1800×1200×1560	660	660	390	120	1190	1115	293.5	268.5
SCB9(10)-400/10	4	1800×1200×1610	660	660	420	120	1195	1170	292.5	263.5
SCB9(10)-500/10	4	1900×1200×1660	660	660	430	120	1230	1210	300.5	270
SCB9(10)-630/10	4	2000×1250×1715	820	660	480	135	1280	1230	330	332
SCB9(10)-630/10	6	2000×1250×1715	820	660	480	135	1260	1230	318	322
SCB9(10)-800/10	6	2000×1350×1815	820	820	485	165	1385	1297	322.5	323.5
SCB9(10)-1000/10	6	2100×1400×1915	820	820	515	155	1465	1519	335	333
SCB9(10)-1250/10	6	2200×1500×2065	820	820	540	185	1597	1542	333	339
SCB9(10)-1600/10	6	2300×1500×2120	1070	1070	565	185	1660	1725	339	346
SCB9(10)-2000/10	6	2300×1500×2340	1070	1070	615	205	1847	1707	357	363
SCB9(10)-2500/10	6	2600×1500×2540	1070	1070	640	205	2020	1867	380	393
SCB9(10)-3150/10	6	2600×1600×2640	1070	1070	695	260	2256	1867	420.5	388.5

Note: Dimensions and data supplied in this manual is only for type selection and design reference; the ultimate dimension should be subjected to actual drawings of the products.

Notes:

1.For transformers within capacity of 500Kva, its foundation channel steel is 14#, namely H1=60;
2.For transformers within capacity of 630Kva-1250Kva, its foundation channel steel is 16#, namely H1=65;
3.For transformers with capacity of 1600Kva, its foundation channel steel is 18#, namely H1=70;
4.For transformers with capacity larger than 630Kva-1250Kva, its foundation channel steel is 14#, namely H1=140.

ezitown
ELECTRIC SOLUTIONS

The dimension of SCB series 10kV Grade 315～2500KVA transformer with protection casing and OLTC

Type	UK（%）	Dimensions（mm）							
		L×B×H	m	n	l	l'	h	k	K'
SCZB10-315/10	4	1800×1660×1660	660	660	420	120	1060	294.5	264.5
SCZB10-400/10	4	1800×1660×1660	660	660	425	120	1130	293.5	264.5
SCZB10-500/10	4	1900×1660×1660	660	660	430	120	1160	300.5	270
SCZB10-630/10	4	2000×1710×1715	820	660	480	135	1210	330	332
SCZB10-630/10	6	2000×1710×1715	820	660	485	135	1176	321	322
SCZB10-800/10	6	2000×1810×1815	820	820	495	165	1275	322.5	323.5
SCZB10-1000/10	6	2100×1860×1915	820	820	520	165	1380	335	336.5
SCZB10-1250/10	6	2200×1960×2065	820	820	555	185	1500	333	339
SCZB10-1600/10	6	2300×1960×2120	1070	1070	565	185	1541	339	346
SCZB10-2000/10	6	2300×1960×2340	1070	1070	615	205	1805	357	363
SCZB10-2500/10	6	2600×1960×2540	1070	1070	640	205	1920	380	393

The dimension of SC series 10kV Grade 630～8000kVA transformer with protection casing

Type	UK（%）	Dimensions（mm）						
		L×B×H	m	n	l	l'	k	k'
SC10-630/10/6	6	1850×1500×1700	820	820	505	205	325	295
SC10-800/10/6	6	2000×1550×1800	820	820	555	225	329	329
SC10-1000/10/6	6	2100×1600×1800	1070	1070	595	240	363	334
SC10-1250/10/6	6	2100×1600×2000	1070	1070	590	237	491	461
SC10-1600/10/6	6	2200×1650×2050	1070	1070	620	260	379	349
SC10-2000/10/6	6	2250×1650×2200	1070	1070	635	265	381.5	352.5
SC10-2500/10/6	6	2400×1650×2200	1070	1070	695	295	416	386
SC10-3150/10/6	6	2600×1700×2300	1070	1300	710	310	430	400
SC10-4000/10/6	7	2700×1750×2350	1070	1300	790	340	440	410
SC10-5000/10/6	7	3000×2100×2840	1475	1475	850	350	516	506
SC10-6300/10/6	7	3200×2100×2940	1475	1475	925	400	521	629
SC10-8000/10/6	9	3500×2300×3140	1475	1475	980	440	527	618

The dimension of SCB series 10kV Grade 250～2500kVA transformer with protection casing

Type	UK（%）	Dimensions（mm）							
		L×B×H	m	n	l	l'	h	k	K'
SCB10-250/20	4	2000×1400×1660	820	820	490	120	1218	380.5	268.5
SCB10-315/20	4	2000×1400×1865	820	820	510	145	1405	387	304
SCB10-400/20	6	2100×1450×1965	820	820	535	145	1470	407	324
SCB10-500/20	6	2100×1450×1965	820	820	535	145	1547	416	330
SCB10-630/20	6	2200×1500×2065	820	820	540	165	1580	413.5	326.5
SCB10-800/20	6	2300×1550×2065	820	820	565	180	1657	420	339
SCB10-1000/20	6	2300×1550×2165	820	820	600	200	1722	430.5	347
SCB10-1250/20	6	2400×1600×2340	1070	1070	615	190	1807	439	351
SCB10-1600/20	6	2500×1700×2440	1070	1070	660	185	1898	449	361
SCB10-2000/20	6	2700×1700×2540	1070	1070	680	205	2042	479.5	391
SCB10-2500/20	6	2700×1800×2740	1070	1070	715	215	2238	480.5	402

Low-voltage Standard Horizontal Row Side Outlet

For the convenience of the connection between terminal of power transformer and low-voltage switch cabinet when they are placed side by side and shortening the delivery time, please select the following standard horizontal row outlet transformers.

Dimension of Standard Horizontal Side Outlets

Type	Uk%	Dimensions（mm）								LV Terminal
		L×B×H	m	n	l	l'	h	K	S	
SC9(10)-250/10	4	1800×1200×2200	660	660	380	200	1262	310	100	(a)
SCB9(10)-315/10	4	1800×1200×2200	660	660	420	120	1126	294.5	100	(b)
SCB9(10)-400/10	4	1800×1200×2200	660	660	425	120	1195	293.5	100	(b)
SCB9(10)-500/10	4	1900×1200×2200	660	660	430	120	1230	300.5	100	(c)
SCB9(10)-630/10	4	2000×1250×2200	820	660	470	135	1265	330	100	(c)
SCB9(10)-630/10	6	2000×1250×2200	820	660	480	135	1260	318	100	(c)
SCB9(10)-800/10	6	2000×1350×2200	820	820	485	165	1385	322.5	100	(d)
SCB9(10)-1000/10	6	2100×1400×2200	820	820	515	145	1465	335	100	(d)
SCB9(10)-1250/10	6	2200×1500×2200	820	820	540	185	1597	333	100	(e)
SCB9(10)-1600/10	6	2300×1500×2200	1070	1070	565	185	1662	339	100	双并(e)
SCB9(10)-2000/10	6	2300×1500×2400	1070	1070	615	205	1940	357	120	双并(e)
SCB9(10)-2500/10	6	2600×1500×2500	1070	1070	640	205	2020	380	120	双并(e)

Note: Dimensions and data supplied in this manual is only for type selection and design reference; the ultimate dimension should be subjected to actual drawings of the products.

Remarks

1.For transformers within capacity of 200kVA, the wire should be let out regulallyregularly, and the side outlet should be connected with cables by users.;
2.For transformers with capacity larger than 1600kVA, a, b, c should let the wire out in double rows with a distance between the rows of 10 (1600, 2000kVA) or 12 (2500kVA).;
3.Because of the side zero conductor locating on the upper part of the transformer, i. It is recommended that for the cabinet with its zero conductor drawn out from the bottom, . the The zero conductor should still enter into the switch cabinet from the upper part; .
4.It is suggested that the low voltage terminals should be connected to the switch cabinets with soft cables;.
5.There are cabinet doors on both low voltage and high voltage sides of the protective casing.;
6.The temperature controller is installed on low voltage side of the protective casing;.
7.For transformers within capacity of 500Kva500KVA, its foundation channel steel is 14#, namely H1=60;.
8.For transformers within capacity of 630Kva630KVA-1250Kva1250KVA, its foundation channel steel is 16#, namely H1=65;
9.For transformers with capacity of 1600Kva1600KVA, its foundation channel steel is 18#, namely H1=70;
10.For transformers with capacity larger than 630Kva630KVA-1250Kva1250KVA, its foundation channel steel is 14#, namely H1=140.

Outline drawing of standard horizontal side outlets

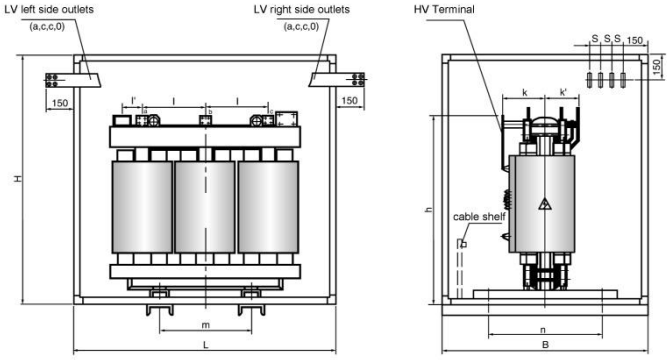

LV Connection Terminal Bus Bar

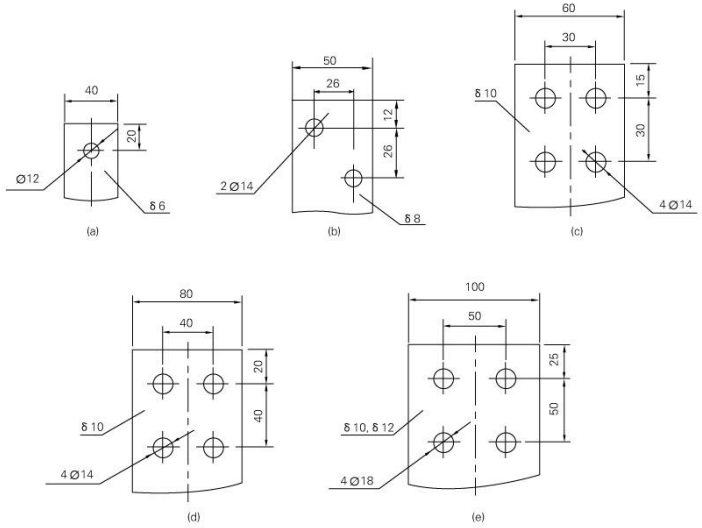

Note: Dimensions and data supplied in this manual is only for type selection and design reference only; the ultimate dimension should be subjected to actual drawings of products.

Low-voltage Standard Horizontal Row Side Outlet

For the convenience of the connection between terminal of power transformer and switch cabinet when they are placed side by side and shortening the delivery time, please select the following standard horizontal row outlet transformers.

Dimension of Standard Horizontal Side Outlets

Type	Uk%	Dimensions（mm）									LV Terminal
		L×B×H	m	n	l	s1	h	K1	S	h1	
SC9(10)-250/10	4	1800×1200×2200	660	660	380	120	1262	300	120	625	(a)
SCB9(10)-315/10	4	1800×1200×2200	660	660	420	120	1126	264.5	120	625	(b)
SCB9(10)-400/10	4	1800×1200×2200	820	660	425	120	1195	264.5	120	625	(b)
SCB9(10)-500/10	4	1900×1200×2200	820	660	430	120	1230	300.5	160	625	(c)
SCB9(10)-630/10	4	2000×1250×2200	820	660	470	130	1265	332	160	625	(c)
SCB9(10)-630/10	6	2000×1250×2200	820	660	480	130	1260	322	160	625	(c)
SCB9(10)-800/10	6	2000×1350×2200	820	820	485	140	1385	323.5	180	1450	(d)
SCB9(10)-1000/10	6	2100×1400×2200	820	820	515	175	1465	333	180	1450	(d)
SCB9(10)-1250/10	6	2200×1500×2200	820	820	540	175	1597	339	200	1450	(e) δ 10
SCB9(10)-1600/10	6	2300×1500×2200	1070	1070	565	175	1660	346	200	1450	双并(e)
SCB9(10)-2000/10	6	2300×1500×2400	1070	1070	615	175	1940	363	240	1450	双并(e)
SCB9(10)-2500/10	6	2600×1500×2500	1070	1070	640	175	2020	393	240	1450	双并(e)

Note: Dimensions and data supplied in this manual is only for type selection and design reference; the ultimate dimension should be subjected to actual drawings of the products.

Remarks

1.For transformers within capacity of 200kVA, the wire should be let out regulallyregularly, and the side outlet should be connected with cables by users.;

2.For transformers with capacity larger than 1600kVA, a, b, c should let the wire out in double rows with a distance between the rows of 10 (1600, 2000kVA) or 12 (2500kVA).;

3.Because of the side zero conductor locating on the upper part of the transformer, i. It is recommended that for the cabinet with its zero conductor drawn out from the bottom, . the The zero conductor should still enter into the switch cabinet from the upper part; .

4.It is suggested that the low voltage terminals should be connected to the switch cabinets with soft cables;.

5.There are cabinet doors on both low voltage and high voltage sides of the protective casing.;

6.The temperature controller is installed on low voltage side of the protective casing;.

7.For transformers within capacity of 500Kva500KVA, its foundation channel steel is 14#, namely H1=60;.

8.For transformers within capacity of 630Kva630KVA-1250Kva1250KVA, its foundation channel steel is 16#, namely H1=65;

9.For transformers with capacity of 1600Kva1600KVA, its foundation channel steel is 18#, namely H1=70;

10.For transformers with capacity larger than 630Kva630KVA-1250Kva1250KVA, its foundation channel steel is 14#, namely H1=140

ezitown
ELECTRIC SOLUTIONS

Dimension of Standard Horizontal Side Outlets

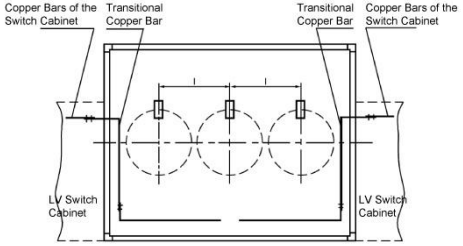

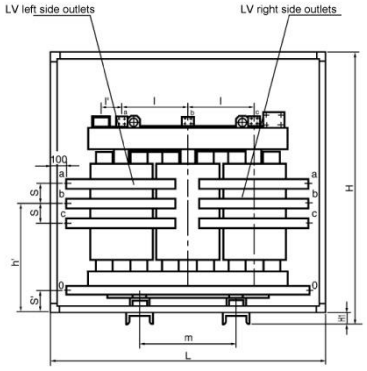

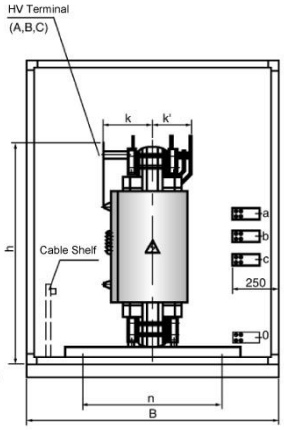

TECHNICAL PARAMETERS

Dimension of Standard Enclosed Bus-bar Outlet

Type	Uk%	Dimensions (mm)							LV Terminal
		L×B×H	m	n	K	K1	K2	h	
SC9(10)-250/10	4	1800×1200×1710	660	660	310	160	100	1262	(a)
SCB9(10)-315/10	4	1800×1200×1560	660	660	293.5	160	100	1190	(b)
SCB9(10)-400/10	4	1800×1200×1610	660	660	292.5	160	100	1195	(b)
SCB9(10)-500/10	4	1900×1200×1660	660	660	299.5	160	100	1230	(c)
SCB9(10)-630/10	4	2000×1250×1715	820	660	333	160	100	1280	(c)
SCB9(10)-630/10	6	2000×1250×1715	820	660	316	160	100	1260	(c)
SCB9(10)-800/10	6	2000×1350×1815	820	820	322	200	130	1385	(d)
SCB9(10)-1000/10	6	2100×1400×1915	820	820	333.5	200	130	1465	(d)
SCB9(10)-1250/10	6	2200×1500×2065	820	820	332	225	150	1597	(e)
SCB9(10)-1600/10	6	2300×1500×2120	1070	1070	338	235	150	1660	(e)
SCB9(10)-2000/10	6	2300×1500×2340	1070	1070	338	235	150	1940	(f)
SCB9(10)-2500/10	6	2600×1500×2540	1070	1070	380	235	150	2020	(f)

Note: Dimensions and data supplied in this manual is only for type selection and design reference; the ultimate dimension should be subjected to actual drawings of the products.

Flange Dimension

kVA	a	a1	a2	b	b1	b2
1600-2500	550	150	650	270	160	370
1250	550	150	650	250	150	350
1000	450	125	550	200	125	300
800	450	125	550	200	125	300
≤630	450	125	550	120	85	220

Note: Dimensions and data supplied in this manual is only for type selection and design reference; the ultimate dimension should be subjected to actual drawings of the products.

Drawing of Flange

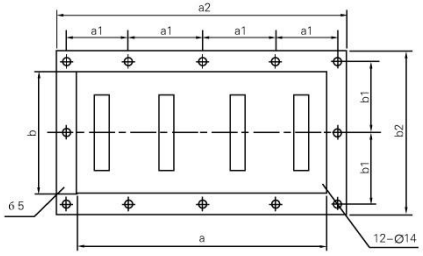

Notes:

1.For transformers within capacity of 500Kva500KVA, its foundation channel steel is 14#, namely H1=60;
2.For transformers within capacity of 630Kva630KVA-1250Kva1250KVA, its foundation channel steel is 16#, namely H1=65;
3.For transformers with capacity of 1600Kva1600KVA, its foundation channel steel is 18#, namely H1=70;
4.For transformers with capacity larger than 630Kva630KVA-1250Kva1250KVA, its foundation channel steel is 14#, namely H1=140.

STANDARD ENCLOSED BUS-BAR OF SC(B)9 SERIES

The standard closed bus-bar line terminal is supplied for the convenience of connecting with the external enclosed bus-bar. Transformers with shell enclosure (IP20) can be supplied with enclosed bus-bar flange, while transformers without shell enclosure (IP20) would just be equipped with enclosed bus-bar terminal.

Closed bus-bar terminal

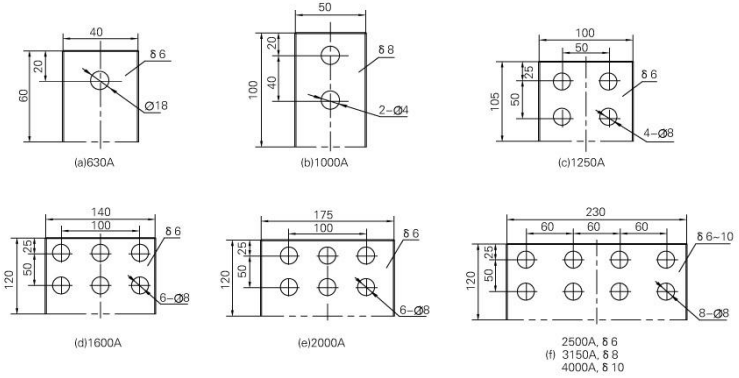

Drawings of enclosed bus-bar terminal

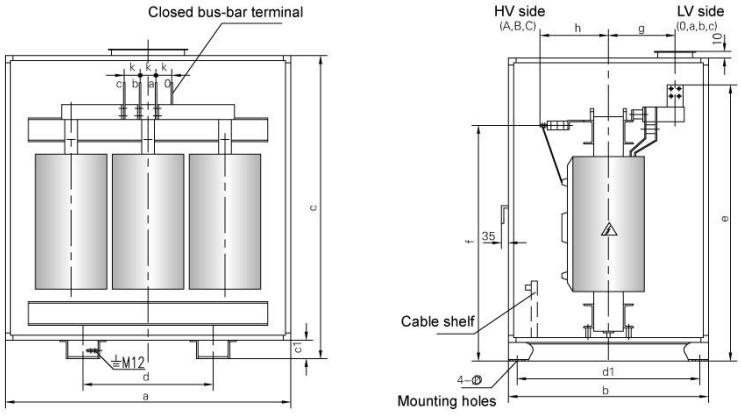

Standard Enclosed Bus-bar Outlet

The standard closed bus-bar line terminal is supplied for the convenience of connecting with the external enclosed bus-bar. Transformers with shell enclosure (IP20) can be supplied with enclosed bus-bar flange, while transformers without shell enclosure (IP20) would just be equipped with enclosed bus-bar terminal.

Enclosed Bus-bar Terminal

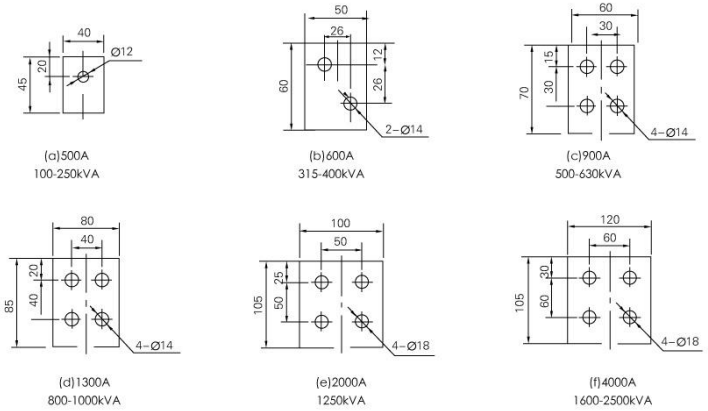

Drawing of Enclosed Bus-bar Product

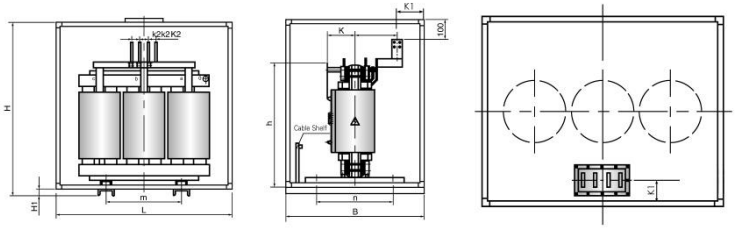

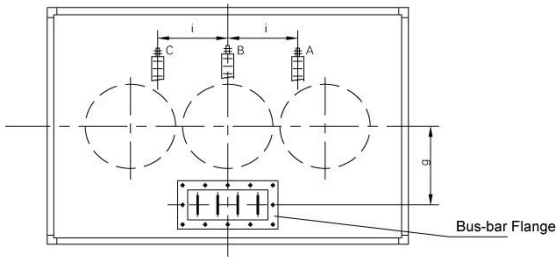

Drawings of Flange

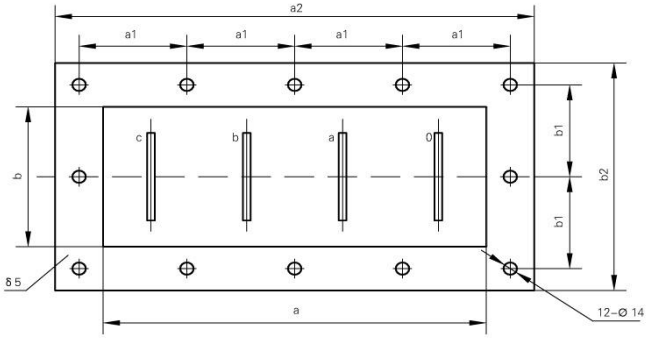

Notes:

1.The above dimension and installation size is for reference only, subjected to the ultimate conformation.
2.Isolated bus-bar can be used on the high voltage side according to user's requirements;
3.In order to enhance eletromagnetic compatibility, anti-jamming capability and to improve electric field between high voltage and low voltage, electrostatic shielding should be equipped bwtweenbetween the first and second windings;
4.The vector group is Yd11;
5.Impedance voltage should meet the following special rquirementsrequirements: the capacity of AC-DC short circuit breaking, rectifier switch, DC voltage adjustment rate, output current and voltage.;
6.According to user's requirements, single parallel pattern can be used.

The following aspects should be taken into consideration when we design excitation transformer:

1.The capacity of excitation transformer should be practical and the influence of higher harmonic should also be considered.;
2.The designed temperature rise should be 20K lower than the temperature rise limits at the transformer's heat-resistant grade.;
3.Insulation structure should be designed reasonable and the overvoltageover voltage formed by the rectifier should be taken into consideration.

And the following measures should be taken according to the operation of excitation transformer:

1.Display high voltage winding in a reasonable way to improve the layout of electric field, avoid the partial higher strength of field which theoretically could reduce the partial discharge to the minimum, and study and analyze the lightning-shaped shock wave of transformer to improve lightning impulse of over-voltage capacity.;
2.From the analysis of lightning-shaped shock wave, it is known that windings at the top and end of high voltage winding have the highest over-voltage, so insulation of the mentioned windings should be enhanced to improve the ability to bear over-voltage.;
3.Advanced cooling structure should be adopted in the winding of high and low voltage.;
4.A strictly control process should be established before manufacturing of transformers, and advanced skills and devices should be adopted to make operations of transformers stable and safe.

SC(B)9 SERIES10KVGRADE 30～2500KVA EXCITATION TRANSFORMER

MODEL DESCRIPTIONS

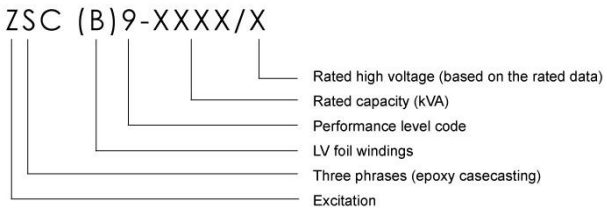

Product Standard GB/T10228,GB6450,IEC726,DIN42523

INTRODUCTION

In recent years, with the development of electric power conrolcontrol system and the improvement of the function of protective devices and the use of new materials and technologies, especially with the fast development of power and electronic products, selection of excitation of large and medium water and electric motors has changed from traditional rotary exchange exciter to static exciter. Therefore, as an important part of excitation system, excitation transformer gaintransformer gains more and more attention from users.

Currently excitation system of large and medium water and power motors adopts automatic parallel excitation, and thus, excitation transformer is an important device in this type of excitation. The following is a typical diagram of automatic parallel excitation system:

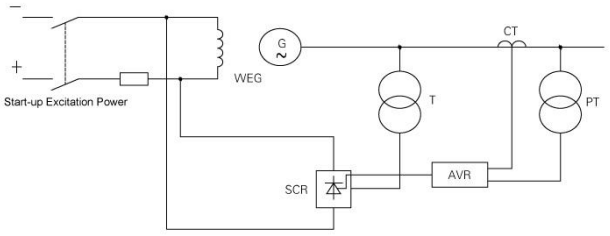

Picture 1 the scheme of automatic parallel static excitation
G——Generator T——Excitation Transformer
SCR——Silicon-controlled rectifier AVR——Automatic voltage regulator

DIMENSIONS

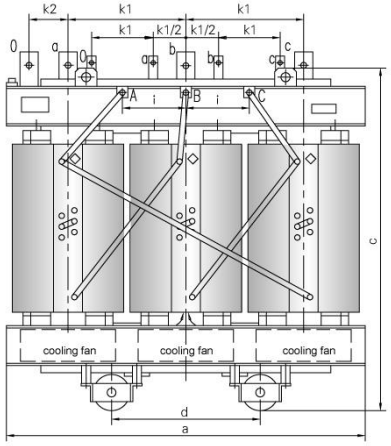

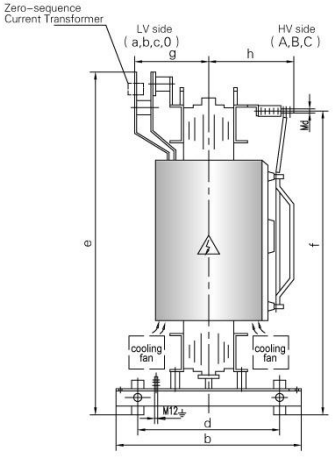

注：1.高压出线端子Md，当容量＜2000kVA时，Md=M10；容量≥2000kVA时，Md=M16；
2.箔式产品低压端子0，a，b，c为不对称结构，图中含有k1，k2参数；绕线产品低压端子0，a，b，c为对称结构，图中仅含k1参数；
3.强迫冷风系统（风机）尺寸不超过本体尺寸（a×b）范围。

LV Connection Terminal Bus Bar

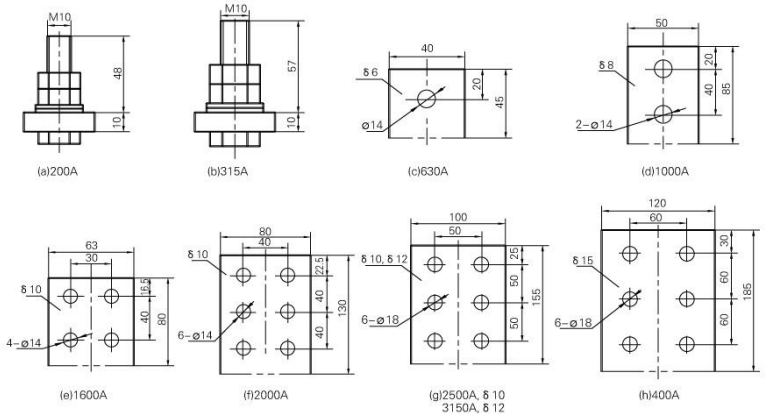

Vector Group: Yd11 Insulation level: LI75AC35/LI0AC3

Sketch map of inlet way

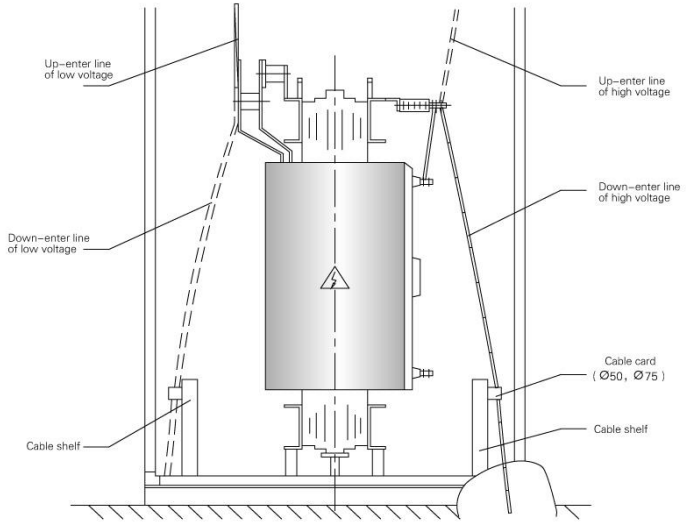

OVER-LOAD CAPACITY

Besides low noise and less loss, the products have strong overload capacity. The curve between overload capacity and overload time in different temperatures is given in the chart below.

SC(B)10 overload curve（ambient temperature 20℃）

Pr – Rated capacity Ps – Initial capacity P – Overload capacity

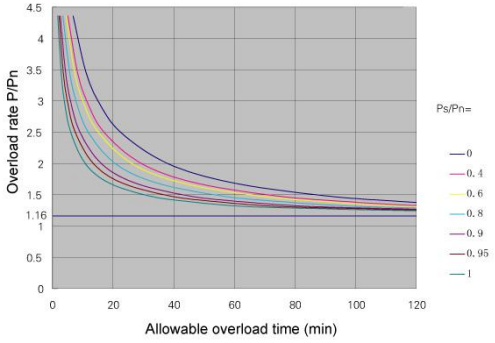

SC(B)10 overload curve（ambient temperature 20℃）

Pr – Rated capacity Ps – Initial capacity P – Overload capacity

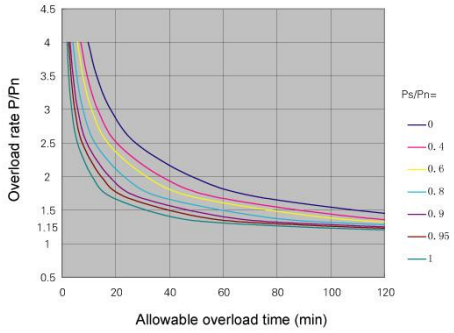

SC(B)10 overload curve（ambient temperature 40℃）

Pr – Rated capacity Ps – Initial capacity P – Overload capacity

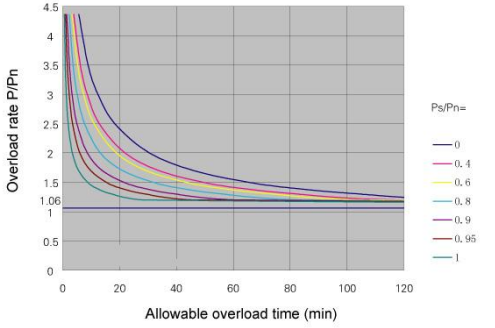

SC(B)10 overload curve（ambient temperature 40℃）

Pr – Rated capacity Ps – Initial capacity P – Overload capacity

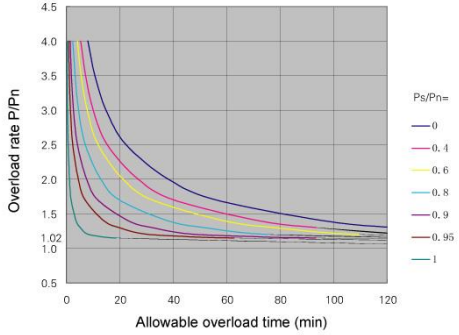

The aboved is grade-F insulation overload curve, for higher overload requirement, we can offer mature Grade-H insulation products.

FORCED AIR COOLING SYSTEM

There are two ways to cool dry-type transformer, namely natural air cooling (AN) and forced air cooling (AF).
When running under normal conditions, the transformer can keep rated capacity continuously during natural air cooling (AN);
When running under normal conditions, the output of the transformer can exceed 50% of the rated capacity during forced air cooling (AF); it is suitiablesuitable for the condition with sudden overload or discontinuous overload. We don't recommondrecommend the way of forced air cooling(AF) for long time overload continuously because the load loss and the short circuit impedance have fairly increased.
Whether AF or AN is applied, sound ventilation condition of the transformer room is required. When installed underground or in other places with poor air condition, the transformer must be equipped with ventilation settings, usually it needs (2-4) m3/min air conditioning per KW loss.
The quantity of the cooling fan, power and power source shcemescheme are given in the chart below:

Transformer capacity（kVA）	315~500	630~800	1000~2500	3150	⩾3150
The quantity of the cooling fan X power（W）	4X50	4X60	4X120	6X60	6X60～120
The cooling fan power source	~220V	~220V	~220V	~220V	~220V

Forced air cooling sysemsystem is controlled by the temperature controlling equipment to realize starting-up and stopping.

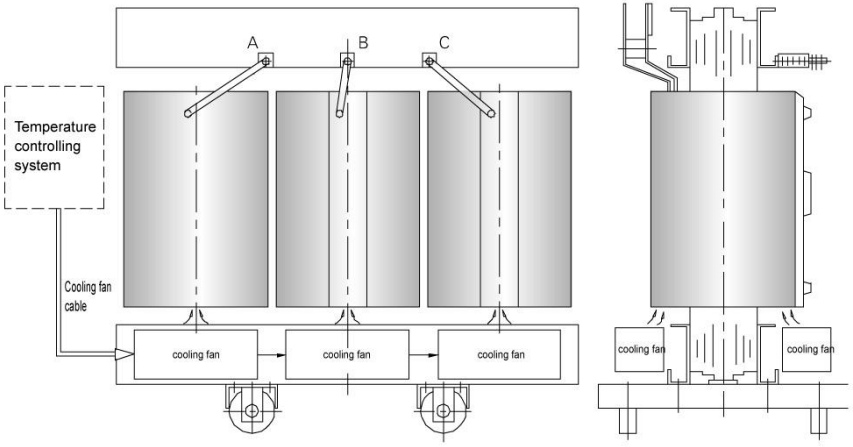

The dimension（a x b x c）of forced air cooling system (cooling fan) can't surpass the dimension of the transformer.

Dry transformers of special use

Traction rectifier transformers
Rated capacity is 800～4400kVA, voltage grade is 10 or 35kV, rectifier pulse number is 12 pulse or 24 pulse. And as the 24 pulse rectifier circuit could reduce harmonic pollution 50% less than 12 pulse rectifier circuit, the filtering equipment could be saved. This kind of transformer could be applied to power supply system of metro lines and subways.

Excitation rectifier transformer
With rated capacity of 315～3000×3kVA and voltage grade of 10, 13.8, 15.75, 20, or 22kV, the transformer normally adopts single-phase structure, high voltage enclosed isolated phase busbar inlet, and shield between high voltage windings. It is applicable to static excitation systems of hydro power and power plants.

Regular rectifier transformer
Rated capacity: 315～4000kV A, voltage grade: 10 or 35kV;
Applicable to rectifier system in regular factory and mining industries.

H-bridge rectifier transformer
Rated capacity: 315～2500kV A, voltage grade: 3 or 6kV, 3～9 windings per phase per transformer, and two transformers could be integrated through phase coulpingcoupling to form H-bridge rectifier.
Applicable to motor AC - AC converter power supply system.

Three-phases five-column rectifier transformer
Rated capacity: 315～2500kV A, voltage grade: 10 or 35kV.
In dual-reverse star-shaped rectifier circuit, the transformer could run without balance reactor, reduce the impact of surge current, and reduce the transportation height.
Applicable to transformers in limited space or reverse star-shaped rectifier system.

Metallurgical furnace transformer
Rated current within 315～2500kV A, voltage grade: 10 or 35kV; with non-excitation tap changer.
Applicable to large current furnace metallurgy power system.

Marine and oil platform transformer
Rated capacity: 30～10000kVA, voltage grade: 0.38 or 35kV.
Passed the authentification of China Classification Society (CCS) and received certificate of marine products from CCS.
Applicable to marine and oil platform power system.

Nuclear power plant transformer
Rated capacity: 1000～1250kVA, voltage grade: 10kV.
Passed examination and authentification of dry type transformers for IE nuclear power plant.
Applicable to nuclear power plant and IE power system of reactor island for reactor plant devices.

Electrified railway transformer
Rated capacity: 20～315kVA, voltage grade: 27.5kV. Vector group: Dyn11, Ii0, and IIyn0(two phases changed into three phases).
Applicable to auxiliary power systems for electrified railway traction substation, distribution station, AT station, and sectioning post.

Autotransformer
Rated capacity: 30～2500kVA, voltage grade: 10 or 35 kV.
The product could reduce cost.
Applicable to motor starting power supply system.

Dual-voltage switching transformer
Rated capacity: 30～2500kVA, voltage grade: 6 or 10 kV.
Voltage convertionconversion from 6kV to 10kV could be realized through changing vector group or connection methods of windings.
Applicable to power supply systems of different voltages.

CEEG also produce other transformers for special use. If you are interested, please feel free to contact staff at 025-83275395.

LOW VOLTAGE METERING DEVICE

Circuit diagram

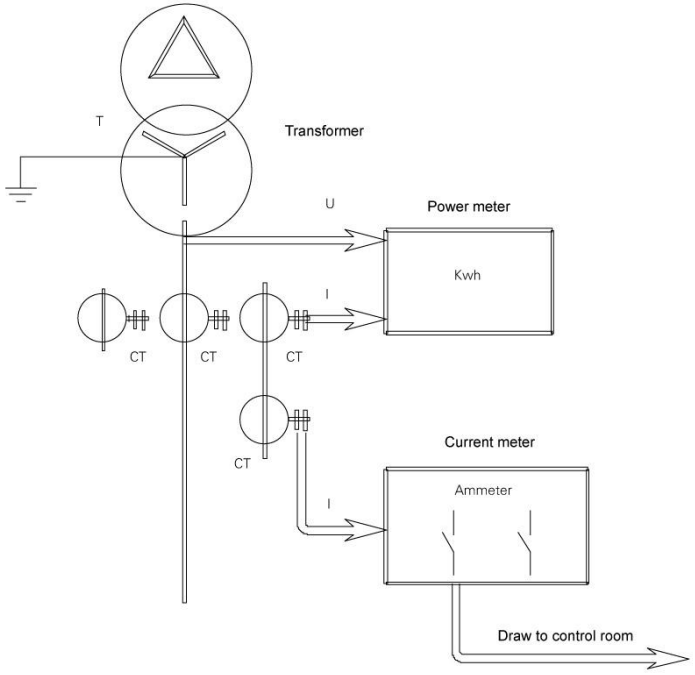

For the convenience of measurement for individual customers and to meet the needs of international customers, power meter(kWh) and load current meter(AMMETER) were installed on low voltage side.
By testing the current to the current transformer on low voltage connecting terminal busbar and secondary voltage, the power meter can get the caculatecalculate the power used by transformer at a precision level of 0.5.
The AMMETER monitors secondary load current of the transformer. And the ampere meter shows the loading current directly and provides assistant functions as below:
Record the max loading current;
Provide two groups of signal points;
When the loading current exceeds setted set data(e.g. 80%Ir or 100%Ir), the ampere meter will turn on the alarm or the brake-off signal. And customers can be drawn to the controlling room.
Installation position:
For products with covers, the power meter and the AMMETER are fixed on the low voltage side of the transformer, and their dimensions could not exceed that of covers.

In order to centralize the monitoring and to optimize the running to improve reliability, quality of powe r supply and to reduce cost, auto power distribution system requires auto inspection, adjustment and control of devices on power distribution net. As voltage convertionconversion and power transmission equipment in power distribution net, automation level of transformer could affect the automation level of power distribution net. FTU can collect and control data of the transformer automatically in real time. It could record and memorize the current, voltage and active power data on low voltage side of the transformer. It could also exchange data with SCADA through communication net to realize remote testing, communication and control between main station and tributary stations, and to realize economy, safety and reliability of the transformer.

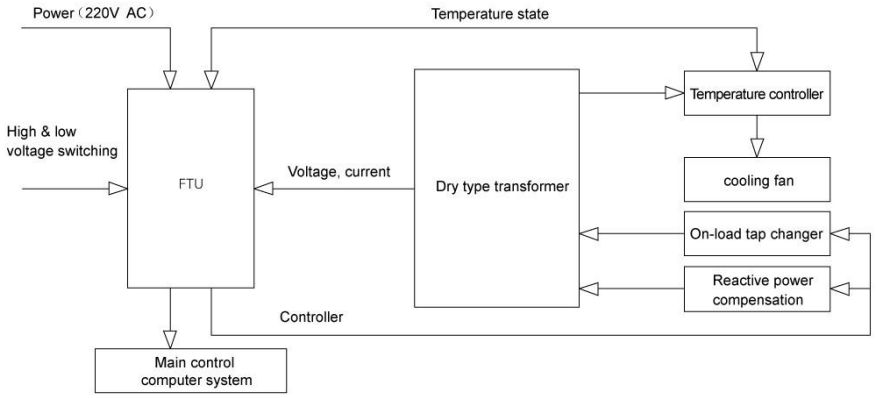

Technical specifications

To test the voltage, current, frequency and temperatures on low voltage of the transformer;
To test precision: U、I、T（temperature）：0.5%;
To record and store the operation data of the transformer for 90 days;
To use the background microcomputer to gather and draw various load curve of the transformer;
To monitor the operation condition of the cooling fan and other facilities;
With RS232or RS485 communication interface, to use different methods to communicate with the main computer, such as optical cable, telephone line and radio;
Communication protocol：SC1801, CDT and IEC870－5－101（DL/T 634－1997）；
Operation temperature：-25℃～70℃ Humidity：100%.