EZITOWN ELECTRIC CO.,LTD.

ISO9001: 2008

About US

Ezitown Electric Co.,Ltd, is a provider of power equipment and services for the global electric utility industry, Founded in 2010. It mainly manufacture power transmission & distribution equipment,covering many product series as Fuse cutout,Surge arrester,Composite insulator,Disconnecting switch,Electric power fitting.

Ezitown As one of the international electrical companies in China,We not only manufacture the power equipment,but also provide sustainable power solutions underpinned by technology innovation.To date,Ezitown conducts business in nearly 50 countries and territories in Sorth America, Europe, Latin America, Asia, Africa, and the Middle East. Ezitown s high standards have received due recognition from the local power customers.

Ezitown s worldwide operation and sales coverage is backed by exceptional experience and expertise to provide customers with the most reliable and highest quality products and services available.For the quality control system,Ezitownwas successively awarded ISO 9001:2008 by DAS CERTIFICATION LTD & UKAS QUALITY MANAGEMENT,and TYPE TEST REPORT by CHINA NATIONAL HIGH VOLTAGE APPARATUS QUALITY SUPERVISION TESTING CENTER(XIHARI) & QUALITY INSPECITION AND TEST CENTER FOR EQUIPMENT OF ELECTRIC POWER.

We promise we will offer first-class quality , reasonable price,first-class service and following the business philosophy of development and innovation to serve global power customers!

Quality Certificates

Contents

FUSE CUTOUT SERIES	PAGE 2-12
DISCONNECTING SWITCH SERIES	PAGE 13-21
SURGE ARRESTER SERIES	PAGE 22-27
COMPOSITE INSULATOR SERIES	PAGE 28-35
PORCELAIN INSULATOR SERIES	PAGE 36-47
ELECTRIC POWER FITTING SERIES	PAGE 48-51

FUSE CUTOUT
Series

12KV-15KV

Type	Rated voltage (kV)	Rated current (A)	Breaking current (A)	Impulse voltage (BIL)	Power-frequency withstand voltage	Leakage distance (mm)	Weight (kG)	Dimensions (cm)
HV-1	15	100	10000	110	40	250	7.3	38.5x34.5 x10.5
	15	200	12000	110	40	250	7.3	

12KV-15KV

Type	Rated voltage (kV)	Rated current (A)	Breaking current (A)	Impulse voltage (BIL)	Power-frequency withstand voltage	Leakage distance (mm)	Weight (kG)	Dimensions (cm)
HV-2	15	100	10000	110	40	250	7.5	40x34.5 x11
	15	200	12000	110	40	250	7.5	

12KV-15KV

Type	Rated voltage (kV)	Rated current (A)	Breaking current (A)	Impulse voltage (BIL)	Power-frequency withstand voltage	Leakage distance (mm)	Weight (kG)	Dimensions (cm)
HV-3	15	100	10000	110	40	250	7.3	38.5x34.5 x10.5
	15	200	12000	110	40	250	7.3	

12KV-15KV

Type	Rated voltage (kV)	Rated current (A)	Breaking current (A)	Impulse voltage (BIL)	Power-frequency withstand voltage	Leakage distance (mm)	Weight (kG)	Dimensions (cm)
HV-4	15	100	8000	110	40	340	7.5	42x33 x11.5
	15	200	10000	110	40	340	7.5	

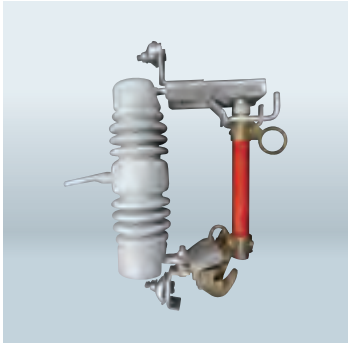

12KV-15KV

Type	Rated voltage (kV)	Rated current (A)	Breaking current (A)	Impulse voltage (BIL)	Power-frequency withstand voltage	Leakage distance (mm)	Weight (kG)	Dimensions (cm)
HV-5	11	100	10000	110	40	250	7	39x35 x11
	11	200	12000	110	40	220	7	

12KV-15KV

Type	Rated voltage (kV)	Rated current (A)	Breaking current (A)	Impulse voltage (BIL)	Power-frequency withstand voltage	Leakage distance (mm)	Weight (kG)	Dimensions (cm)
HV-6	15	100	10000	110	40	350	3.8	45x35 x12
	15	200	12000	110	40	350	3.8	

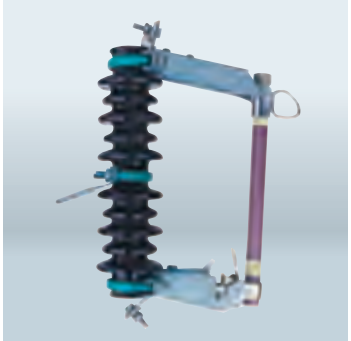

12KV-15KV

Type	Rated voltage (kV)	Rated current (A)	Breaking current (A)	Impulse voltage (BIL)	Power-frequency withstand voltage	Leakage distance (mm)	Weight (kG)	Dimensions (cm)
HV-7	11	100	6000	110	42	340	7.5	49x27 x11.5
	11	200	8000	110	42	340	7.5	

12KV-15KV

Type	Rated voltage (kV)	Rated current (A)	Breaking current (A)	Impulse voltage (BIL)	Power-frequency withstand voltage	Leakage distance (mm)	Weight (kG)	Dimensions (cm)
HV-8	11	100	6000	110	45	530	12	51.5x51.5 x13
	11	200	8000	110	45	530	12	

12KV-15KV

Type	Rated voltage (kV)	Rated current (A)	Breaking current (A)	Impulse voltage (BIL)	Power-frequency withstand voltage	Leakage distance (mm)	Weight (kG)	Dimensions (cm)
HV-9	15	100	10000	110	40	300	7.5	39x34.5 x10.5
	15	200	12000	110	40	300	7.5	

12KV-15KV

Type	Rated voltage (kV)	Rated current (A)	Breaking current (A)	Impulse voltage (BIL)	Power-frequency withstand voltage	Leakage distance (mm)	Weight (kG)	Dimensions (cm)
HV-10	15	100	10000	100	45	380	7.3	45.5x35.5 x10.5
	15	200	12000	110	45	380	7.3	

12KV-15KV

Type	Rated voltage (kV)	Rated current (A)	Breaking current (A)	Impulse voltage (BIL)	Power-frequency withstand voltage	Leakage distance (mm)	Weight (kG)	Dimensions (cm)
HV-11	15	100	10000	100	40	260	8.5	48.5x44 x13.5
	15	200	12000	110	40	260	8.5	

15KV-27KV

Type	Rated voltage (kV)	Rated current (A)	Breaking current (A)	Impulse voltage (BIL)	Power-frequency withstand voltage	Leakage distance (mm)	Weight (kG)	Dimensions (cm)
HV-12	15	100	10000	125	45	350	8.5	48x34.5 x10.5
	15	200	12000	125	45	350	8.5	

15KV-27KV

Type	Rated voltage (kV)	Rated current (A)	Breaking current (A)	Impulse voltage (BIL)	Power-frequency withstand voltage	Leakage distance (mm)	Weight (kG)	Dimensions (cm)
HV-13	15	100	10000	125	45	350	8.8	51.5x34 x12
	15	200	12000	125	45	350	8.8	

15KV-27KV

Type	Rated voltage (kV)	Rated current (A)	Breaking current (A)	Impulse voltage (BIL)	Power-frequency withstand voltage	Leakage distance (mm)	Weight (kG)	Dimensions (cm)
HV-14	15	100	10000	125	45	350	8.5	45x34.5 x10
	15	200	12000	125	45	350	8.5	

15KV-27KV

Type	Rated voltage (kV)	Rated current (A)	Breaking current (A)	Impulse voltage (BIL)	Power-frequency withstand voltage	Leakage distance (mm)	Weight (kG)	Dimensions (cm)
HV-15	15	100	10000	125	45	350	8.5	48x35 x10.5
	15	200	12000	125	45	350	8.5	

15KV-27KV

Type	Rated voltage (kV)	Rated current (A)	Breaking current (A)	Impulse voltage (BIL)	Power-frequency withstand voltage	Leakage distance (mm)	Weight (kG)	Dimensions (cm)
HV-16	15	100	10000	125	45	350	12	50x36 x13
	15	200	12000	125	45	350	12	

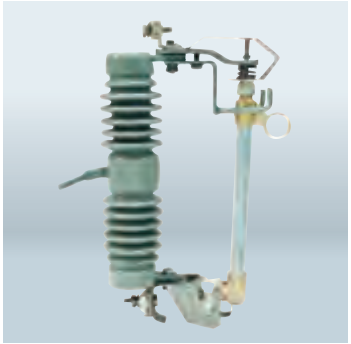

15KV-27KV

Type	Rated voltage (kV)	Rated current (A)	Breaking current (A)	Impulse voltage (BIL)	Power-frequency withstand voltage	Leakage distance (mm)	Weight (kG)	Dimensions (cm)
HV-17	15	100	10000	125	45	350	8.5	48x35 x10.5
	15	200	12000	125	45	350	8.5	

24KV-27KV

Type	Rated voltage (kV)	Rated current (A)	Breaking current (A)	Impulse voltage (BIL)	Power-frequency withstand voltage	Leakage distance (mm)	Weight (kG)	Dimensions (cm)
HV-18	24	100	8000	150	65	530	12	48x34.5 x14
	24	200	10000	150	65	530	12	

24KV-27KV

Type	Rated voltage (kV)	Rated current (A)	Breaking current (A)	Impulse voltage (BIL)	Power-frequency withstand voltage	Leakage distance (mm)	Weight (kG)	Dimensions (cm)
HV-19	24	100	8000	150	65	540	12	49x35 x14
	24	200	10000	150	65	540	12	

24KV-27KV

Type	Rated voltage (kV)	Rated current (A)	Breaking current (A)	Impulse voltage (BIL)	Power-frequency withstand voltage	Leakage distance (mm)	Weight (kG)	Dimensions (cm)
HV-20	24	100	8000	150	65	470	13	56x38 x10.5
	24	200	10000	150	65	470	13	

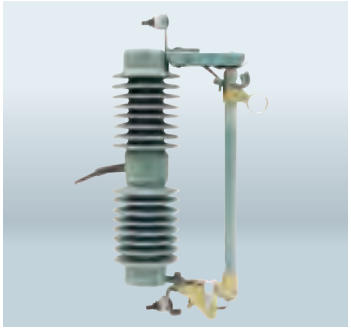

27KV-33KV

Type	Rated voltage (kV)	Rated current (A)	Breaking current (A)	Impulse voltage (BIL)	Power-frequency withstand voltage	Leakage distance (mm)	Weight (kG)	Dimensions (cm)
HV-21	30	100	6000	170	70	700	15	56x38 x14.5
	30	200	8000	170	70	700	15	

33KV-36KV

Type	Rated voltage (kV)	Rated current (A)	Breaking current (A)	Impulse voltage (BIL)	Power-frequency withstand voltage	Leakage distance (mm)	Weight (kG)	Dimensions (cm)
HV-22	33	100	10000	170	70	720	15.5	57x38 x14.5
	33	200	12000	170	70	720	15.5	

33KV-36KV

Type	Rated voltage (kV)	Rated current (A)	Breaking current (A)	Impulse voltage (BIL)	Power-frequency withstand voltage	Leakage distance (mm)	Weight (kG)	Dimensions (cm)
HV-23	33	100	8000	170	70	820	27.5	68x17 x15
	33	200	10000	170	70	820	27.5	

12KV-15KV

Type	Rated voltage (kV)	Rated current (A)	Breaking current (A)	Impulse voltage (BIL)	Power-frequency withstand voltage	Leakage distance (mm)	Weight (kG)	Dimensions (cm)
HV-24	15	100	10000	125	45	350	8.0	50x36 x13
	15	200	12000	125	45	350	8.0	

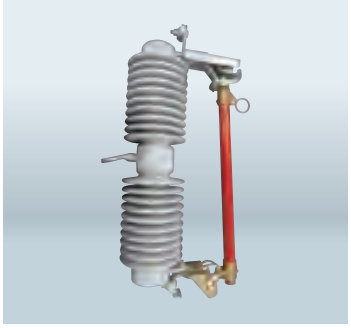

33KV-36KV

Type	Rated voltage (kV)	Rated current (A)	Breaking current (A)	Impulse voltage (BIL)	Power-frequency withstand voltage	Leakage distance (mm)	Weight (kG)	Dimensions (cm)
HV-25	36	100	10000	170	70	900	16	56x38 x15
	36	200	12000	170	70	900	16	

12KV-15KV

Type	Rated voltage (kV)	Rated current (A)	Breaking current (A)	Impulse voltage (BIL)	Power-frequency withstand voltage	Leakage distance (mm)
HV-26	12-15	100	10000	110	40	380
	12-15	200	12000	110	40	380

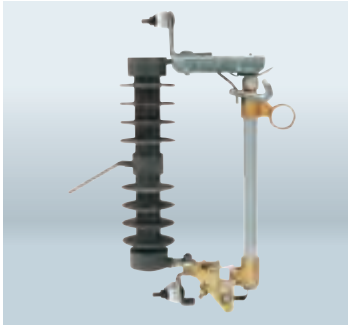

12KV-15KV

Type	Rated voltage (kV)	Rated current (A)	Breaking current (A)	Impulse voltage (BIL)	Power-frequency withstand voltage	Leakage distance (mm)
HV-27	12-15	100	10000	110	40	380
	12-15	200	12000	110	40	380

24KV-27KV

Type	Rated voltage (kV)	Rated current (A)	Breaking current (A)	Impulse voltage (BIL)	Power-frequency withstand voltage	Leakage distance (mm)
HV-28	24-27	100	6000	150	65	560
	24-27	200	8000	150	65	560

24KV-27KV

Type	Rated voltage (kV)	Rated current (A)	Breaking current (A)	Impulse voltage (BIL)	Power-frequency withstand voltage	Leakage distance (mm)
HV-29	24-27	100	6000	150	65	650
	24-27	200	8000	150	65	650

24KV-27KV

Type	Rated voltage (kV)	Rated current (A)	Breaking current (A)	Impulse voltage (BIL)	Power-frequency withstand voltage	Leakage distance (mm)
HV-30	24-27	100	6000	150	65	800
	24-27	200	8000	150	65	800

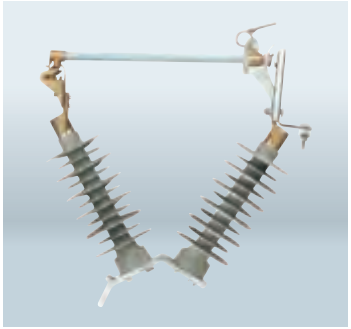

27KV-33KV

Type	Rated voltage (kV)	Rated current (A)	Breaking current (A)	Impulse voltage (BIL)	Power-frequency withstand voltage	Leakage distance (mm)
HV-31	27-33	100	6000	170	70	1070
	27-33	200	8000	170	70	1070

27KV-33KV

Type	Rated voltage (kV)	Rated current (A)	Breaking current (A)	Impulse voltage (BIL)	Power-frequency withstand voltage	Leakage distance (mm)
HV-32	27-33	100	6000	170	70	620
	27-33	200	8000	170	70	620

30KV-33KV

Type	Rated voltage (kV)	Rated current (A)	Breaking current (A)	Impulse voltage (BIL)	Power-frequency withstand voltage	Leakage distance (mm)
HV-33	30-33	100	6000	170	70	680
	30-33	200	8000	170	70	680

36KV-38KV

Type	Rated voltage (kV)	Rated current (A)	Breaking current (A)	Impulse voltage (BIL)	Power-frequency withstand voltage	Leakage distance (mm)
HV-34	36-38	100	6000	180	75	820
	36-38	200	8000	180	75	820

15KV-27KV

Type	Rated voltage (kV)	Rated current (A)	Breaking current (A)	Impulse voltage (BIL)	Power-frequency withstand voltage	Leakage distance (mm)	Weight (kG)	Dimensions (cm)
HV-35	15	100	10000	125	45	330	9	50x33.5 x12
	15	200	12000	125	45	330	9	

24KV-27KV

Type	Rated voltage (kV)	Rated current (A)	Breaking current (A)	Impulse voltage (BIL)	Power-frequency withstand voltage	Leakage distance (mm)	Weight (kG)	Dimensions (cm)
HV-36	24	100	8000	150	65	500	11	51x32 x15
	24	200	10000	150	65	500	11	

12KV-15KV

Type	Rated voltage (kV)	Rated current (A)	Breaking current (A)	Impulse voltage (BIL)	Power-frequency withstand voltage	Leakage distance (mm)	Weight (kG)	Dimensions (cm)
HV-37	15	100	10000	110	40	225	6	39x35 x11
	15	200	12000	110	40	225	6	

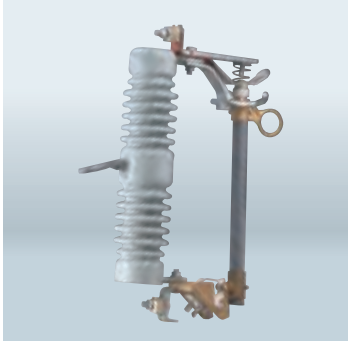

24KV-27KV

Type	Rated voltage (kV)	Rated current (A)	Breaking current (A)	Impulse voltage (BIL)	Power-frequency withstand voltage	Leakage distance (mm)	Weight (kG)	Dimensions (cm)
HV-38	24	100	10000	125	45	320	7.2	48x35 x11
	24	200	12000	125	45	320	7.2	

24KV-27KV

Type	Rated voltage (kV)	Rated current (A)	Breaking current (A)	Impulse voltage (BIL)	Power-frequency withstand voltage	Leakage distance (mm)	Weight (kG)	Dimensions (cm)
HV-39	36	100	10000	170	70	660	12.7	51x35 x14
	36	200	12000	170	70	660	12.7	

EXPULSION FUSE LINK

Technical Specification

- Expulsion fuse link for fuse cutout
- Rated voltage: 11KV-36KV
- Rated current: 1A-200A
- Rate of melting: Class K & Class T

Outline Dimension

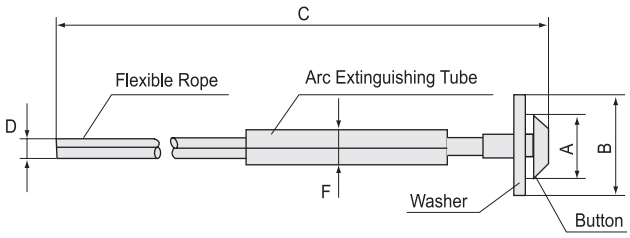

FIXED BUTTON TYPE

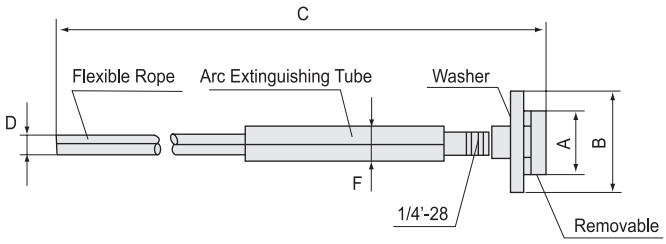

REMOVABLE TYPE

Rated current (A)	Dimension(mm)				
	A	B	C	D	F
1 to 25	12.5 ± 0.2	19.0 ± 0.2	533	2.0	6.5
30 to 40	12.5 ± 0.2	19.0 ± 0.2	533	3.0	8.0
50 to 100	19.0 ± 0.3	(Not applicable)	533	5.0	10.0

DISCONNECTING SWITCH
Series

RH-B-11/33KV OUTDOOR GANG ISOLATOR SWITCH

Summary

Outdoor AC Gang isolator switch 11KV/400A-33KV/600A used in 3 phase AC 50/60Hz power circuit, it is used as switching on and switching off at the voltage with no load. It apply to IEC standard. IEC60964: 1996, IEC62271-102:2002

Technical Specification

Type	Rated voltage (kV)	Rated current (A)	4S heat steady e.c. (A)	Rated peak withstand current (A)	Impulse withstand voltage		Power-frequency withstand voltage	
					To earth (kV)	Across the isolating distance (kV)	To earth (kV)	Across the isolating distance (kV)
RH-B	11	400	12500	31500	75	95	38	42
	33	600	12500	31500	170	195	70	80

Outline Dimension

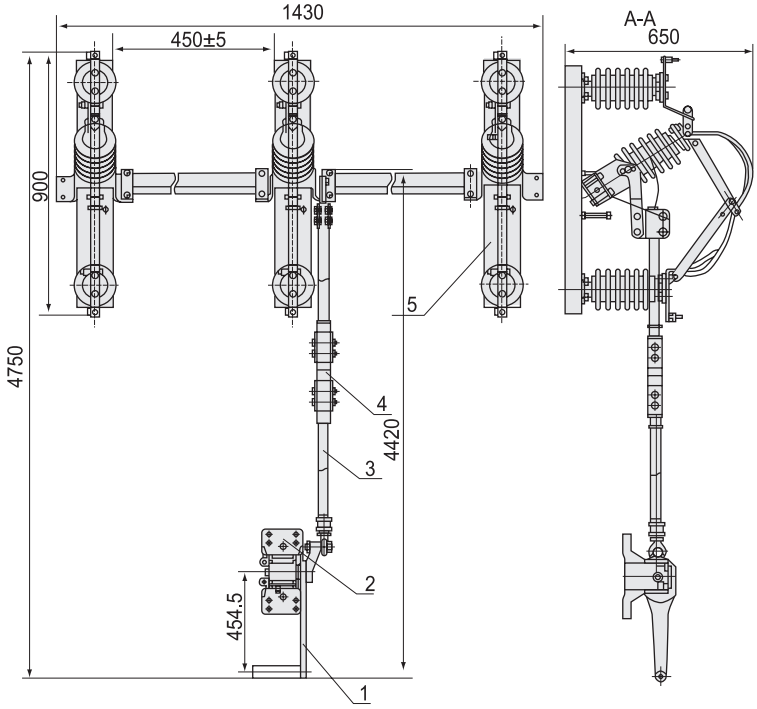

GWR-12/36 OUTDOOR AC HIGH VOLTAGE DISCONNECT SWITCH (FUSE TYPE)

Summary

GWR-12/36 outdoor AC. high voltage fused type disconnect switch (disconnect switch for short) is used in electric power system with rated frequency 50/60Hz, rated voltage 12/36kV. Its main for making or breaking circuit under line supplying voltage in outdoor high voltage distribution system equipments. Thereof anti-pollution type disconnect switch is especially used in serious polluted area. It accords with standards of IEC62271-103: High voltage switches.

Ambient Condition

- Altitude: ≤1000m;
- Ambient temperature: +50℃ ~-30℃;
- Wind speed: ≤35m/s;
- Earthquake intensity: ≤8 degree;
- Air pollution: IV;
- Ice thickness: ≤10mm;
- Applicable occasions of normal type switch should free from chemistry aggradation, dust and other volatile & caustic thing.

Model

G W R - 12(36) / 100

- 100 — Rated current
- 12(36) — Rated voltage
- R — Fuse
- W — Outdoor
- G — Disconnect switch

Structure Feature

Disconnect switch is composed of fuse components, frame and operating insulator, fixed contact, contact blade and linkage spring mechanism.

- Cutout fuse assemble: mainly combine with upper, down movable and fixed contact, arc extinguish bushing, insulator and mount support parts, during normal work, the fuse linking the moving joint of the arc extinguish bushing with movable contactor, the arc extinguish bushing is at closed position under the pressure of the fixed contactor.
- Frame: Base is bended from steel sheet, axis with pulling arm cross through frame center. Holes drilled on base are used for fixing post insulator.
- Post and operating insulator: anti-erode post insulator.
- Fixed contactor: contact blade made of red copper plate, fixed on post insulator and extended level plane end as for connecting wire and upside of curve connected both side reliable with contacting blade.
- Contact blade: it's made of two rectangle section red copper plates, both ends of contact blade attached with spiral spring to adjust contacting pressure.
- Switch could be operated combined with CS mechanism vertical mounting on outdoor double electric poles.

Technical Specification

No.	Item		Unit	Data	
1	Rated voltage		kV	12	36
2	Rated current		A	100	100
3	Rated frequency		Hz	50/60	50/60
4	Maximum breaking current		kA	5	5
5	Main circuit resistance		μ Ω	≤150	≤150
6	1min. PF withstand voltage (dry)	Phase to phase/ earth across open contacts	kV	42/48	95/115
7	1min. PF withstand voltage (wet)			30	85
8	Lightning impulse withstand voltage			95/110	185/215
9	Mechanical life	Disconnect switch	Times	2000	2000
		Fuse cutout		300	300

Outline Dimension

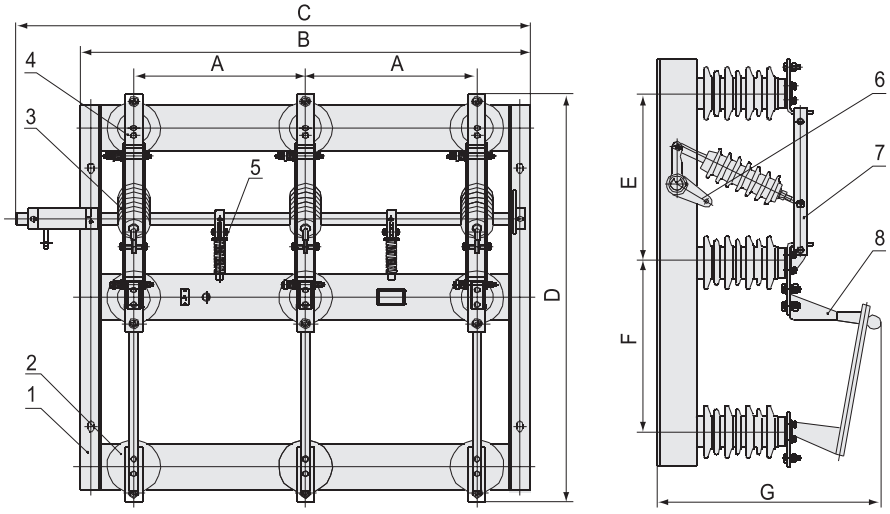

1. Frame
2. Post insulator
3. Porcelain insulator
4. Contact
5. Spring
6. Rotate shaft corner arm
7. Disconnect blade
8. Cutout fuse

Type	Main outline dimenstion(mm)						
	A	B	C	D	E	F	G
GWR-12/100	400	1050	1200	1073	400	490	667
GWR-36/100	500	1300	1450	1433	550	640	909

GW1-12/36 OUTDOOR DISCONNECT SWITCH

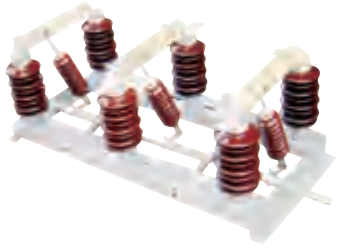

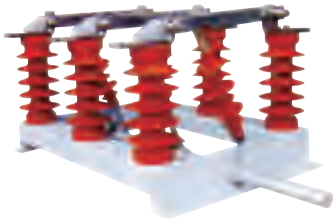

Summary

GW1-12(36)/630-20(25) outdoor AC high voltage disconnect switch (disconnect switch for short) is used to open and close circuit with voltage but no-load 50/60Hz, 12(36)kV power system, The anti-pollution type can be used in the serious pollution area. Three pole linkage, good synchronous performance.

Ambient Condition

- Altitude: ≤3000m;
- Ambient temperature: -30℃ ~+40℃;
- Wind speed: ≤35m/s;
- Air pollution: IV;
- Earthquake intensity: ≤8 degree;
- Ice thickness: ≤10mm.

Model

G W 1 - 12(36) / 630 - 20/25

- 20/25 — Rated short-time withstand current(kA)
- 630 — Rated current(A)
- 12(36) — Rated voltage(kV)
- 1 — Design serial No.
- W — Outdoor
- G — Disconnect switch

Technical Specification

No.	Item		Unit	Data	
1	Rated voltage		kV	12, 36	
2	Rated current		A	630	
3	Rated power frequency		Hz	50/60	
4	Rated peak withstand current		kA	50,63	
5	Rated short-time withstand current		kA	20,25	
6	Rated short-time withstand current duration		S	4	
7	Main loop resistance		μΩ	12kV≤90	36kV≤100
8	1min(dry) power frequency withstand voltage	Phase to phase/earth across open contacts	kV	42/48	95/115
9	1min(wet) power frequency withstand voltage			30	85
10	Lightning impulse withstand voltage (peak)			75/85	185/215
11	Mechanical life		Times	2000	

Structure Feature

- This disconnect switch consists of frame, operating insulating, static contactor, blade, linkage spring mechanism, etc.
- Frame: 5mm chickness bended armor plate, there are holes on the frame to fixed post insulator.
- Post and operating insulator: adopt ZS-12, 36 series outdoor clubbed post insulator, The mini resist bend load is 4000N.
- Static contactor: it is made of violet copperplate and fixed on post insulator.
- Blade: it is made of rectangular violet copperplate, there is an press-spring to adjust press.
- The switch vertical or horizontal installed in outdoor with CS□ mechanism.

Outline Dimension

Fig.1 GW1-12, 36

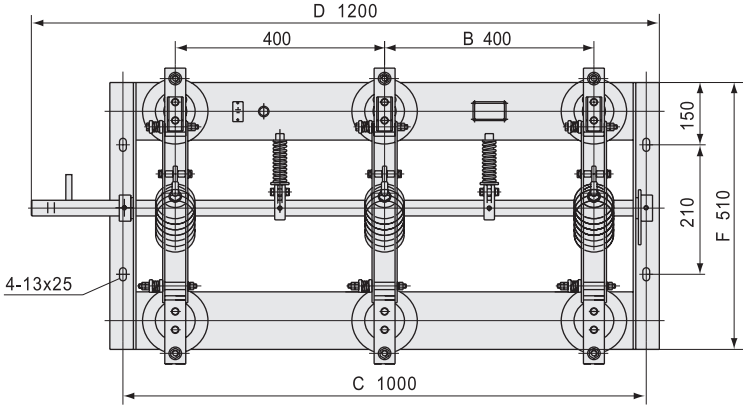

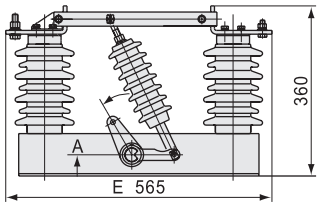

Vertical(V)	130°
Horizontal(H)	50°
Install method	A

Type	B	C	D	E	F
GW1-12/630-20	400	1000	1200	565	510
GW1-36/630-20	500	1250	1450	815	728

Fig.2 GW1-12, 36D witch earthing blade

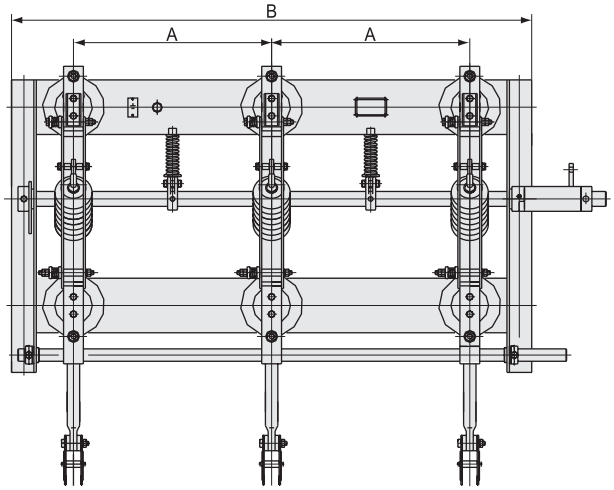

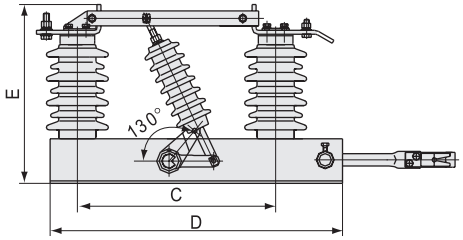

Type	A	B	C	D	E
GW1-12D/1250	400	1050	400	590	403
GW1-36D/1250	500	1300	550	630	620

Fig.3 GW1-12, 36D with earthing blade and lightning arrester

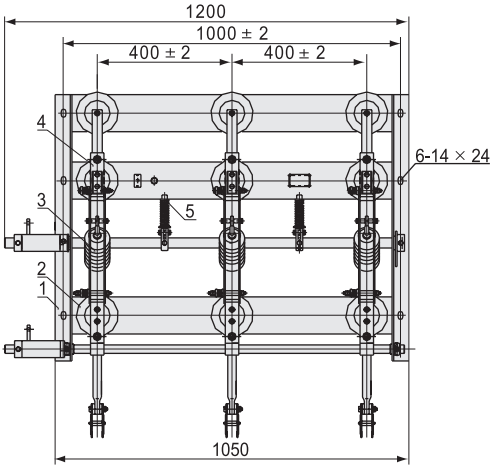

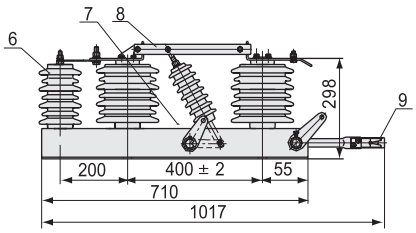

1.Base frame
2.Post insulator
3.Pull insulator
4.Contacts
5.Spring
6.Lightning arrester
7.Rotating shaft turning arm
8.Contact blade
9.Earthing blade

RH-A-15KV/27KV/38KV OUTDOOR DISCONNECT SWITCH(DISTRIBUTION TYPE)

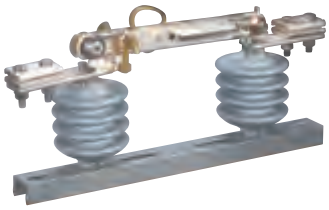

Summary

Outdoor disconnect switch used in 15KV、27KV and 38KV power distribution systems, with current from 200 to 630A. and it used as switching on and switching off at the voltage with no load.

Technical Specification

Nominal voltage (kV)	Maximum voltage (kV)	BIL (kV)	Nominal current (A)	Transient current (kA/Is)	Dimensions			
					A	B	C	D
13.8	15	95	200/630	16	305	270	580	186
13.8	15	95	630	25	305	313	595	230
13.8	15	110	200/630	16	381	270	650	186
13.8	15	110	630	25	381	313	670	230
24.2	27	125	200/630	16	381	310	650	228
24.2	27	125	630	25	381	340	670	260
34.5	38	150	630	25	381	368	670	290
34.5	38	170	630	25	381	400	670	316

Outline Dimension

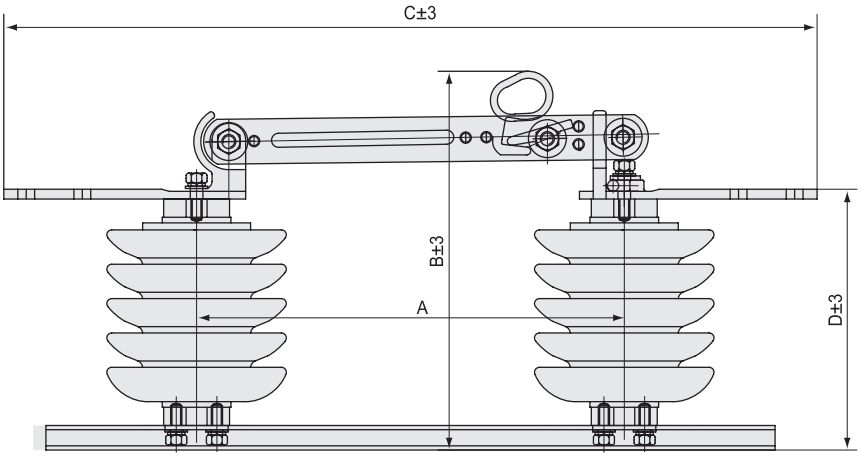

Type	Rated voltage(kV)	Rated current(A)	Breaking current(A)
JDW2-0.5/500	0.5	500	30~500
JDW2-0.5/800	0.5	800	30~800

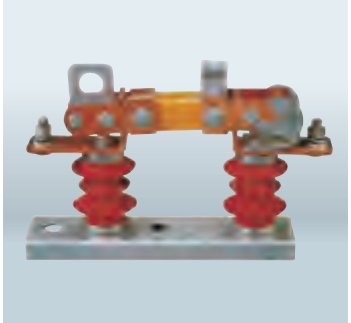

Type	Rated voltage(kV)	Rated current(A)	Breaking current(A)
HJDW2-0.5/500	0.5	500	30~500
HJDW2-0.5/800	0.5	800	30~800

Type	Rated voltage (kV)	Rated current (A)	4S Heat steady e.c.	Shock voltage (A)	Impulse withstand voltage		Power-frequency withstand voltage	
					Relati-vely earth	Between fracture	Relati-vely earth	Between fracture
GW9-10W/200	12	200	12500	31500	75	85	38	42
GW9-10W/400	12	400	12500	31500	75	85	38	42
GW9-10W/630	12	630	12500	31500	75	85	38	42
GW9-10W/1000	12	1000	12500	31500	75	85	38	42

Type	Rated voltage (kV)	Rated current (A)	4S Heat steady e.c.	Shock voltage (A)	Impulse withstand voltage		Power-frequency withstand voltage	
					Relati-vely earth	Between fracture	Relati-vely earth	Between fracture
HGW9-10W/200	12	200	12500	31500	75	85	38	42
HGW9-10W/400	12	400	12500	31500	75	85	38	42
HGW9-10W/630	12	630	12500	31500	75	85	38	42
HGW9-10W/1000	12	1000	12500	31500	75	85	38	42

Type	Rated voltage (kV)	Rated current (A)	4S Heat steady e.c.	Shock voltage (A)	Impulse withstand voltage		Power-frequency withstand voltage	
					Relati-vely earth	Between fracture	Relati-vely earth	Between fracture
GW9-15G/400	15	400	12500	31500	75	85	38	42
GW9-15G/630	15	630	12500	31500	75	85	38	42

GN19-12 INDOOR DISCONNECT SWITCH

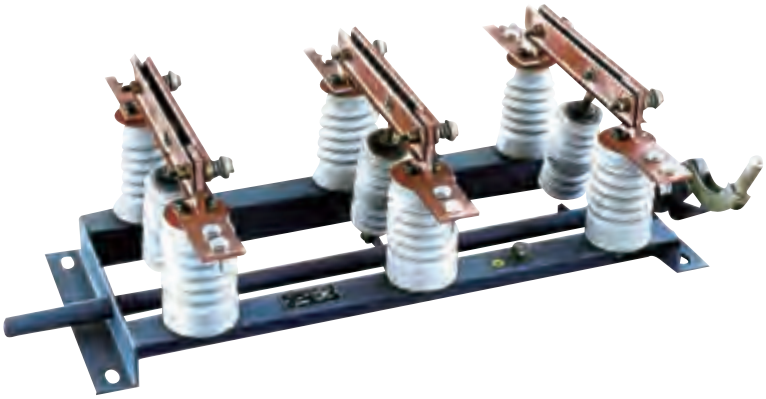

Summary

GN19-12 series isolate switch(indoor), used for in the three-phase AC 50/60Hz, rated voltage 12kV power system, comply with CS6-1 type manual operation mechanism which can be used for opening and closing loading current overloading current and short-circuit. Some type can also be used at heavy pollution or high altitude area.

Service Conditions

- The altitude: 1000m~3000m
- The ambient temperature: -30℃~40℃
- The relative humidity of air: monthly≤90℃,daily≤95℃
- The wind pressure: ≤700pa(wind speed 34m/s)
- Amplitude: earthquake degree 8
- Environment degree: degree Ⅲ
- Cannot be use on thecondition of the danger of fire and blast, heavy pollution, chemical etching, strong shake etc.

Model

G N 19 - 12 (C) □ - □ - □

- Add power display device
- Code of branches
- High voltage prevent pollution type
- Rated current
- Through wall type
- Rated voltage
- Design No.
- Indoor
- Isolating switch

Technical Specification

Code No.	Rated voltage (kV)	Rated current (A)	Rated short time withstand current (4s) kA	Rated peak withstand current kA
GN19-12/400-12.5	12	400	12.5	31.5
GN19-12/630-20	12	630	20	50
GN19-12/1000-31.5	12	1000	31.5	80
GN19-12/1250-12.5	12	1250	31.5	80
GN19-12C/400-12.5	12	400	12.5	31.5
GN19-12C/630-20	12	630	20	50
GN19-12C/1000-31.5	12	1000	31.5	80
GN19-12C/1250-31.5	12	1250	31.5	80

SURGE ARRESTER
Series

POLYMERIC HOUSED METAL-OXIDE SURGE ARRESTER WITHOUT GAPS NOMINAL DISCHARGE CURRENT 5KA(3-36KV)

3kV

6kV

10kV

12kV

15kV

22kV

24kV

Type	MOA Rated voltage	MCOV	Current impulse Residual Voltage			2ms Rectangular current impulse withstand	4/10 μ s High current impulse withstand
			1/4 μ s Lightning current impulse	8/20 μ s Lightning current impulse	30/60 μ s Switching current impulse		
	kV(rms)	kV(rms)	kV(crest)	kV(crest)	kV(crest)	A(crest)	kA(crest)
YH5W-3	3	2.55	11.3	9	8.9	150	65
YH5W-6	6	5.1	22.6	18	16.8	150	65
YH5W-9	9	7.65	33.7	27	23.8	150	65
YH5W-10	10	8.4	36	30	23	150	65
YH5W-11	11	9.4	40	33	30	150	65
YH5W-12	12	10.2	42.2	36	27	150	65
YH5W-15	15	12.7	51	45	38.5	150	65
YH5W-18	18	15.3	61.5	54	46.2	150	65
YH5W-21	21	17.0	71.8	63	54.2	150	65
YH5W-24	24	19.5	82	72	62	150	65
YH5W-27	27	22.0	92	81	69.8	150	65
YH5W-30	30	24.4	102	90	79	150	65
YH5W-33	33	27.5	112	99	86.7	150	65
YH5W-36	36	29.0	123	108	92.4	150	65

POLYMERIC HOUSED METAL-OXIDE SURGE ARRESTER WITHOUT GAPS NOMINAL DISCHARGE CURRENT 10KA(3-36KV)

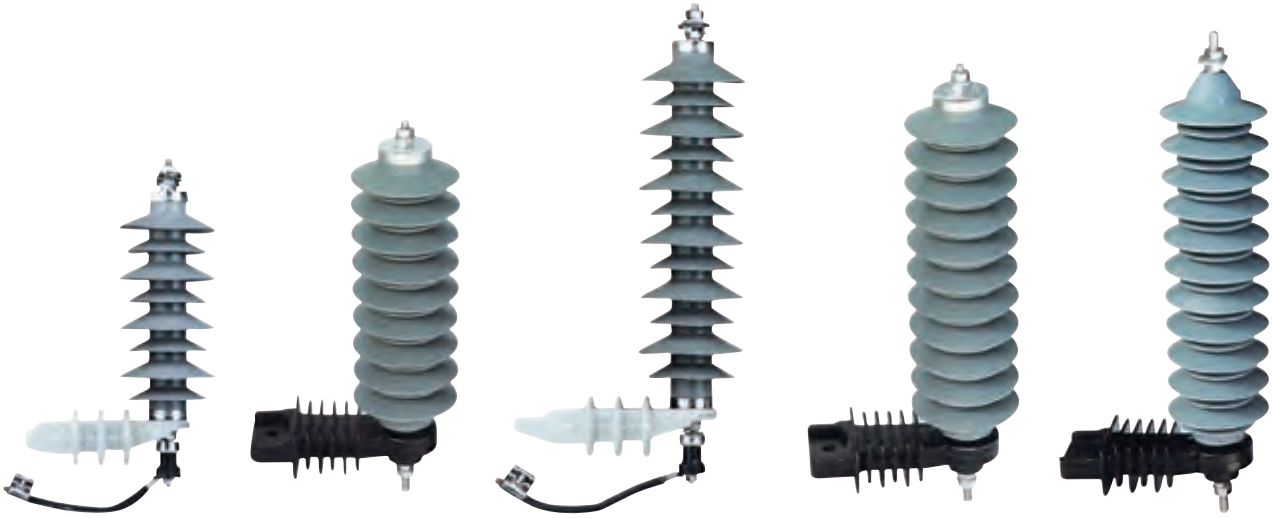

24kV 30kV 33kV 36kV 36kV

Type	MOA Rated voltage	MCOV	Current impulse residual voltage			2ms Rectangular current impulse withstand	4/10 μ s High current impulse withstand
			1/4 μ s Lightning current impulse	8/20 μ s Lightning current impulse	30/60 μ s Switching current impulse		
	kV(rms)	kV(rms)	kV(crest)	kV(crest)	kV(crest)	A(crest)	kA(crest)
YH10W-3	3	2.55	11.3	9	8.9	250	100
YH10W-6	6	5.1	22.6	18	16.8	250	100
YH10W-9	9	7.65	33.7	27	23.8	250	100
YH10W-10	10	8.4	36	30	23	250	100
YH10W-11	11	9.4	40	33	30	250	100
YH10W-12	12	10.2	42.2	36	27	250	100
YH10W-15	15	12.7	51	45	38.5	250	100
YH10W-18	18	15.3	61.5	54	46.2	250	100
YH10W-21	21	17.0	71.8	63	54.2	250	100
YH10W-24	24	19.5	82	72	62	250	100
YH10W-27	27	22.0	92	81	69.8	250	100
YH10W-30	30	24.4	102	90	79	250	100
YH10W-33	33	27.5	112	99	86.7	250	100
YH10W-36	36	29.0	123	108	92.4	250	100

PORCELAIN HOUSED METAL-OXIDE SURGE ARRESTER WITHOUT GAPS (3-36KV)

Type	Rated voltage of arrester (kV)	Max. continuous operating voltage	D.C.(U1mA) reference voltage kV not less than	Nominal discharge current	Max residual voltage(peak)			Current impulse withstand discharge capacity	
					Steep current impulse(kV)	Lightning impulse current(kV)	Switching current impulse(KV)	2000 μ s (A)	4/10 μ s (kA)
Y1.5W-0.28/1.3	0.28	0.24	0.6	1.5	1.4	1.3		75	25
Y1.5W-0.5/2.6	0.5	0.42	1.2	1.5	2.7	2.6		75	25
Y5W-3/10	3	2.55	5.5	5	11.3	10	8.9	150	65
Y5W-6/20	6	5.2	11	5	22.6	20	17.8	150	65
Y10W-3/10	3	2.55	5.2	10	11.3	10	8.9	250	100
Y10W-6/20	6	5.2	10.8	10	22.6	20	17.8	250	100
Y5W-9/30	9	7.70	16.0	5	34	30	26.8	150	65
Y5W-11/36	11	9.4	19.5	5	41.5	36	32.7	150	65
Y5W-12/39	12	10.2	21.5	5	45.3	39	35.7	150	65
Y10W-9/30	9	7.7	16.0	10	34	30	26.8	250	100
Y10W-11/36	11	9.4	19.2	10	41.5	36	32.7	250	100
Y10W-12/39	12	10.2	21.3	10	45.3	39	35.7	250	100
Y5W-15/42	15	12.75	22.0	5	47.5	42	35.8	150	65
Y5W-18/50	18	15.3	26.5	5	57.0	50	43.0	150	65
Y10W-15/42	15	2.75	22.0	10	47.5	42	35.8	250	100
Y10W-18/50	18	15.3	26.0	10	57.0	50	43.0	250	100
Y5W-21/62	21	17.1	33.4	5	70.0	62	54.2	150	65
Y5W-24/70	24	19.5	38.0	5	80.0	70	62.0	150	65
Y10W-21/62	21	17.1	33.0	10	70.0	62	54.2	250	100
Y10W-24/70	24	19.5	37.0	10	80.0	70	62.0	250	100
Y5W-36/100	36	30.4	54.5	5	115	100	86.7	150	65
Y10W-36/100	36	30.4	54.0	10	115	100	86.7	250	100

POLYMERIC HOUSED METAL-OXIDE SURGE ARRESTER (35-220KV)

YH5W-35kV | YH5W-66kV YH10W-66kV | YH5W-110kV | YH10W-110kV | YH10W-220kV

Type	Rated voltage of arrester kV	Nominal voltage of system (virtual value) kV	Continuous operating voltage (virtual value) kV	Reference voltage not less than D.C(U1mA) kV	Max residual voltage(peak)			2000 μ s rectangular impulse current (peak value) A	4/10 μ s impulse current (peak value) kA	The max. leakage current of 0.75DC refference voltage μ A
					Steep current impulse kV	Lightning impulse current kV	Switching current impulse KV			
YH5WZ-42/134	42	35	23	73	154	134	114	150	65	50
YH5WZ-51/134	51	35	40.8	73	154	134	114			
YH5WZ-52.7/134	52.7	35	40.8	73	154	134	114			
YH5WZ-54/134	54	35	41	73	154	134	114			
YH5W-75/215	75	66	60	123	248	215	183	400	65	50
YH5W-90/224	90	66	72.5	130	258	224	190			
YH10W-75/250	75	66	60	127	288	250	213	600	100	50
YH10W-75/223	75	66	60	127	256	223	190			
YH10W-75/230	75	66	60	127	265	230	196			
YH10W-90/224	90	66	72.5	130	258	224	190			
YH10W-90/232	90	66	72.5	130	266	232	198			
YH10W-90/235	90	66	72.5	130	270	235	201			
YH5W-100/260	100	110	78	145	291	260	221	400	65	50
YH5W-102/266	102	110	79.6	148	297	266	226			
YH5W-108/281	108	110	84	157	315	281	239			
YH10W-100/260	100	110	78	145	291	260	221	600	100	50
YH10W-102/266	102	110	79.6	148	297	266	226			
YH10W-108/281	108	110	84	157	315	281	239			
YH10W-200/520	200	220	156	290	582	520	442	600	100	50
YH10W-204/532	204	220	159	296	594	532	452			
YH10W-216/562	216	220	168.5	314	630	562	478			

PORCELAIN HOUSED METAL-OXIDE SURGE ARRESTER WITH GAPS (35-110KV)

Y5W-35kV
Y10W-35kV

Y5W-35kV
Y10W-35kV

Y5W-66kV
Y10W-66kV

Y5W-110kV
Y10W-110kV

Type	Rated voltage of arrester kV	Nominal voltage of system (virtual value) kV	Continuous operating voltage (virtual value) kV	Reference voltage not less than D.C (U1ma) kV	Max residual voltage(peak)			2000 μ s rectangular impulse current (peak value) A	4/10 μ s impulse current (peak value) kA	The max. leakage current of 0.75DC refference voltage μ A
					Steep current impulse kV	Lightning impulse current kV	Switching current impulse kV			
Y5WZ-42/134W	42	35	23	73	154	134	114	150	65	50
Y5WZ-51/134W	51	35	40.8	73	154	134	114			
Y5WZ-52.7/134W	52.7	35	40.8	73	154	134	114			
Y5WZ-54/134W	54	35	41	73	154	134	114			
Y5W-75/215	75	66	60	123	248	215	183	400	65	50
Y5W-90/224	90	66	72.5	130	258	224	190			
Y10W-75/250	75	66	60	127	288	250	213	600	100	50
Y10W-75/223	75	66	60	127	256	223	190			
Y10W-75/230	75	66	60	127	265	230	196			
Y10W-90/224	90	66	72.5	130	258	224	190			
Y10W-90/232	90	66	72.5	130	266	232	198			
Y10W-90/235	90	66	72.5	130	270	235	201			
Y5W-100/260	100	110	78	145	291	260	221	400	65	50
Y5W-102/266	102	110	79.6	148	297	266	226			
Y5W-108/281	108	110	84	157	315	281	239			
Y10W-100/260	100	110	78	145	291	260	221	600	100	50
Y10W-102/266	102	110	79.6	148	297	266	226			
Y10W-108/281	108	110	84	157	315	281	239			

COMPOSITE INSULATOR
Series

LONG ROD SUSPENSION COMPOSITE INSULATOR

12KV-01

24KV-02

36KV-03

36KV-04

24KV-05

12KV-06

Type	Rated voltage (KV)	Specified mechanical load	Section length (mm)	Min Arc distance (mm)	Leakage distance (mm)	Lightning impulse withstand BIL(KV)	Power frequency withstand (wet) (KV)
FXBW4-12/70	12	70	350	180	400	95	45
FXBW4-24/70	24	70	550	370	850	185	95
FXBW4-24/100	24	100	570	370	850	185	95
FXBW4-35/70	36	70	650	450	1000	230	105
FXBW4-35/100	36	100	670	450	1000	230	105

12KV-07

24KV-08

36KV-09

36KV-10

24KV-11

12KV-12

Type	Rated voltage (KV)	Specified mechanical load	Section length (mm)	Min Arc distance (mm)	Leakage distance (mm)	Lightning impulse withstand BIL(KV)	Power frequency withstand (wet) (KV)
FXYW4-12/70	12	70	350	180	400	95	45
FXYW4-24/70	24	70	550	370	850	185	95
FXYW4-24/100	24	100	570	370	850	185	95
FXYW4-35/70	36	70	650	450	1000	230	105
FXYW4-35/100	36	100	670	450	1000	230	105

LONG ROD SUSPENSION COMPOSITE INSULATOR

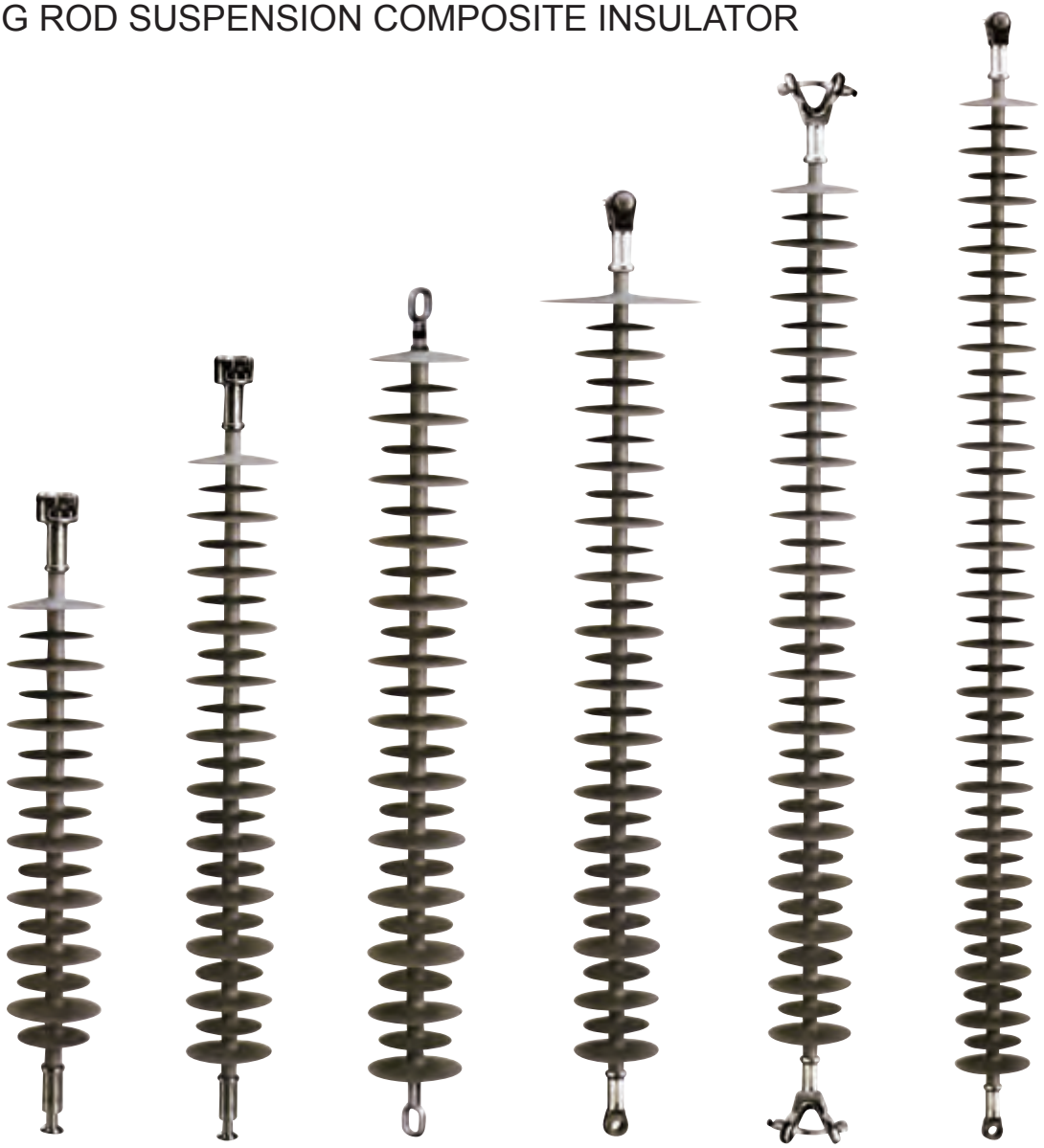

66KV-01 110KV-02 145KV-03 220KV-04 330KV-05 500KV-06

Type	Rated voltage (KV)	Specified mechanical load	Section length (mm)	Min Arc distance (mm)	Leakage distance (mm)	Lightning impulse withstand BIL(KV)	Power frequency withstand (wet) (KV)
FPBW4-66/70	66	70	900	710	1980	410	185
FPBW4-66/100	66	100	940	710	1980	410	185
FPBW4-110/100	110	100	1240	1000	3315	550	230
FPBW4-145/120	145	120	1480	1240	4123	725	355
FPBW4-220/100	220	100	2240	1900	6300	1000	395
FPBW4-220/160	220	160	2240	1900	6300	1000	395
FPBW4-330/100	330	100	2990	2600	9075	1425	570
FPBW4-330/160	330	160	2990	2600	9075	1425	570
FPBW4-500/160	500	160	4080	3730	12750	2250	740

POST COMPOSITE INSULATOR

12KV-01 24KV-02 36KV-03 66KV-04 110KV-05 220KV-06

Type	Rated voltage (KV)	Specified mechanical load	Section length (mm)	Min Arc distance (mm)	Leakage distance (mm)	Lightning impulse withstand BIL(KV)	Power frequency withstand (wet) (KV)
FZSW-12/4	12	4	215	290	100/90	75	42
FZSW-24/8	24	8	400	750	142	150	65
FZSW-36/6	36	6	450	946	148/118	185	95
FZSW-66/6	66	6	760	1886	160/130	410	185
FZSW-66/8	66	8	760	2010	220/190	410	185
FZSW-110/10	110	10	1220	3530	220/190	500	230
FZSW-220/10	220	10	2440	7060	220/190	1000	395

PIN COMPOSITE INSULATOR

12KV-01 24KV-02 36KV-03 66KV-04 110KV-05 220KV-06

Type	Rated voltage (KV)	Specified mechanical load	Section length (mm)	Min Arc distance (mm)	Leakage distance (mm)	Lightning impulse withstand BIL(KV)	Power frequency withstand (wet) (KV)
FZSW-12/4	12	4	215	290	100/90	75	42
FZSW-24/8	24	8	400	750	142	150	65
FZSW-36/6	36	6	450	946	148/118	185	95
FZSW-66/6	66	6	760	1886	160/130	410	185
FZSW-66/8	66	8	760	2010	220/190	410	185
FZSW-110/10	110	10	1220	3530	220/190	500	230
FZSW-220/10	220	10	2440	7060	220/190	1000	395

PIN COMPOSITE INSULATOR

Type	Rated voltage (kV)	Rated mechanical bent failling load (kN)	Thread diameter of downside	H Structure height (mm)	h Insulation distance (mm)	Leakage distance (mm)	Lightning impulse withstand BIL (KV)	Power frequency withstand (Wet) (KV)
FPQ_1-11/4T	11	4	M16/18/20	195	120	300	90	40

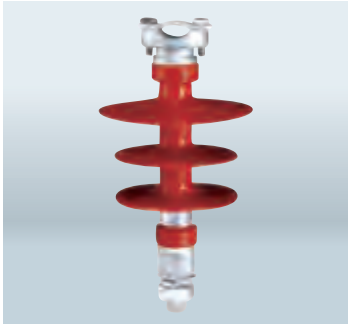

Type	Rated voltage (kV)	Rated mechanical bent failling load (kN)	Thread diameter of downside	H Structure height (mm)	h Insulation distance (mm)	Leakage distance (mm)	Lightning impulse withstand BIL (KV)	Power frequency withstand (Wet) (KV)
FPQ_2-11/3T	11	3	M16/18/20	215	140	400	100	45

Type	Rated voltage (kV)	Rated mechanical bent failling load (kN)	Thread diameter of downside	H Structure height (mm)	h Insulation distance (mm)	Leakage distance (mm)	Lightning impulse withstand BIL (KV)	Power frequency withstand (Wet) (KV)
FPQ_2W-11/3	11	3	M16/18/20	260	185	460	110	50

Type	Rated voltage (kV)	Rated mechanical bent failling load (kN)	Thread diameter of downside	H Structure height (mm)	h Insulation distance (mm)	Leakage distance (mm)	Lightning impulse withstand BIL (KV)	Power frequency withstand (Wet) (KV)
FPS-11/5	11	5	20	280	170	380	105	42

Type	Rated voltage (kV)	Rated mechanical bent failling load (kN)	Thread diameter of downside	H Structure height (mm)	h Insulation distance (mm)	Leakage distance (mm)	Lightning impulse withstand BIL (KV)	Power frequency withstand (Wet) (KV)
FPW-11/2T16	11	2	16	235	126	320	95	40

ELECTRIFIED RAILWAYS COMPOSITE INSULATOR

Type	Rated voltage (kV)	Rated mechanical bent failing load (kN)	Leakage distance (mm)	Lightning impulse withstand BIL (KV)	Power frequency withstand (Wet) (KV)
FQZ-27.5/8	27.5	8	1610	300	150

Type	Rated voltage (kV)	Rated mechanical bent failing load (kN)	Leakage distance (mm)	Lightning impulse withstand BIL (KV)	Power frequency withstand (Wet) (KV)
FQX1-52/135	52	135	1230	250	115

Type	Rated voltage (kV)	Rated mechanical bent failing load (kN)	Leakage distance (mm)	Lightning impulse withstand BIL (KV)	Power frequency withstand (Wet) (KV)
FQB1-52/6	52	6	1300	250	150

Type	Rated voltage (kV)	Rated mechanical bent failing load (kN)	Leakage distance (mm)	Lightning impulse withstand BIL (KV)	Power frequency withstand (Wet) (KV)
FQB-25/5C	25	5	900	200	95

Type	Rated voltage (kV)	Rated mechanical bent failing load (kN)	Leakage distance (mm)	Lightning impulse withstand BIL (KV)	Power frequency withstand (Wet) (KV)
FQB-25/5CT	25	5	900	200	95

Type	Rated voltage (kV)	Rated mechanical bent failling load (kN)	Leakage distance (mm)	Lightning impulse withstand BIL (KV)	Power frequency withstand (Wet) (KV)
FQX1-25/135	25	135	900	200	95

HORIZONTAL LINE POST COMPOSITE INSULATOR

Type	Specified cantilever load kN	N° of sheds A n° (1)	Length L ± 5 mm	Leakage distance mm	Dry arc distance mm	Power frequency withstand 50Hz		Lightning impul. withstand 1,2/50		Weight ~kg
						Dry kV	Wet kV	posit kV	negat. kV	
HLP-01	10.0	2+1	365	390	165	70	65	115	160	6.5
HLP-02	8.4	3+2	420	585	225	110	100	150	190	7.0
HLP-03	7.2	4+3	480	780	285	120	110	180	215	7.5
HLP-04	6.3	5+4	540	975	340	150	140	235	270	8.0
HLP-05	5.5	6+5	600	1170	400	170	155	270	300	8.5
HLP-06	5.0	7+6	660	1365	460	180	165	285	325	9.0
HLP-07	4.5	8+7	715	1560	520	200	185	305	355	9.5
HLP-08	4.2	9+8	775	1755	575	225	210	345	405	10.0

PORCELAIN INSULATOR
Series

PIN PORCELAIN INSULATOR (BS)

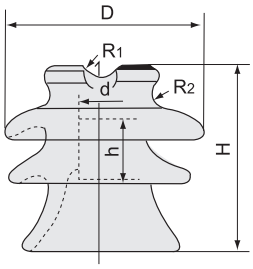

Fig 1

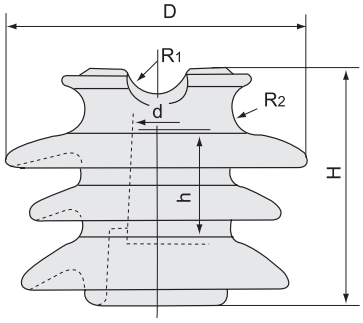

Fig 2

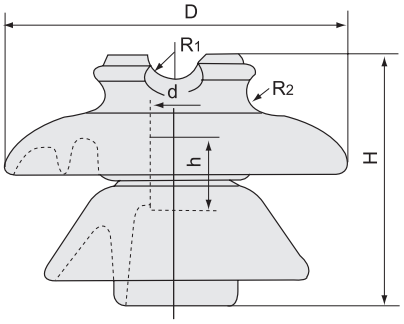

Fig 3

Cat.No			A1001	A1002	A1003	A1004
Fig			1	1	2	3
Class BS			P-11-Y	P-15-Y	P-20-Y	P-33-Y
Main Dimensions (mm)	H		133	137	195	244
	h		48	48	52.63	52.63
	D		140	152	230	279
	d		18.29	18.29	27.78	27.78
	R_1		13	13	19	19
	R_2		9.5	12.7	14.3	13
Nominal Voltage (kV)			11	15	22	33
Creepage Distance (mm)			240	298	432	630
Minimum Flashover Voltage	Power-frequency	Dry (kV)	75	80	100	135
		Wet (kV)	45	55	60	85
	50% Impulse	Positive (kV)	100	130	160	185
		Negative (kV)	110	175	205	
Withstand Voltage	One minute power-frequency	Dry (kV)	65	70	90	110
		Wet (kV)	40	50	55	75
	Impulse (kV)			110	150	
Radio-Influence-Voltage Data	Test Voltage to Ground (kV)		15	15	22	30
	Maximum RIV at 1000kHz (uV)		8000	8000	12000	16000
Power-frequency puncture Voltage(kV)			135	135	145	185
Cantilever Failing Load(kN)			11	11	11	13
Weight (kg)			1.8	-	-	11.5

PIN PORCELAIN INSULATOR (BS)

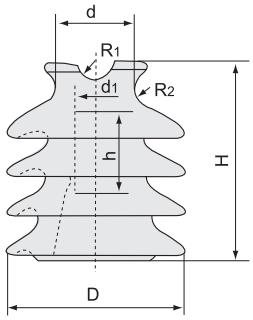

Fig 1

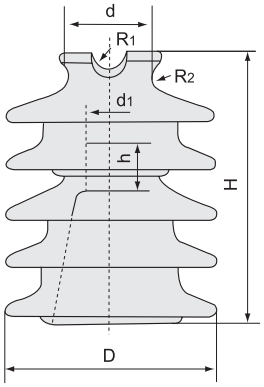

Fig 2

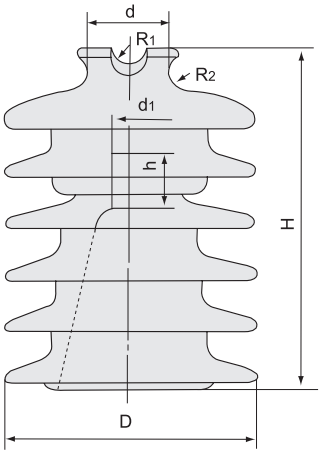

Fig 3

Cat.No			A1005	A1006	A1007
Fig			1	2	3
Class BS			Pw-11-Y	Pw-22-Y	Pw-33-Y
Main Dimensions (mm)	H		185	255	320
	h		52.63	52.63	52.63
	D		170	205	240
	d		76	76	76
	d_1		27.78	27.78	27.78
	R_1		16	16	16
	R_2		16	16	16
Nominal Voltage (kV)			15	22	33
Creepage Distance (mm)			432	673	851
Power-frequency puncture voltage (kV)			150	200	210
Minimum Flashover Voltage	50% Impulse positive		150	190	210
	Power-frequency	Dry (kV)	100	125	140
		Wet (kV)	65	95	110
Withstand Voltage	One minute power-frequency	Dry (kV)	90	110	125
		Wet (kV)	60	90	100
	Impulse (kV)		140	180	200
Radio-Influence-Voltage Data	Test Voltage to Ground (kV)		22	30	44
	Maximum RIV at 1000kHz (uV)		12000	16000	25000
Cantilever Failing Load(kN)			11	11	11
Weight (kg)			5	10	13

SUSPENSION ANTI-POLLUTION PORCELAIN INSULATOR (BS)

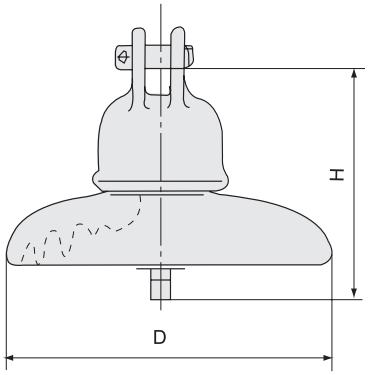

Fig 1

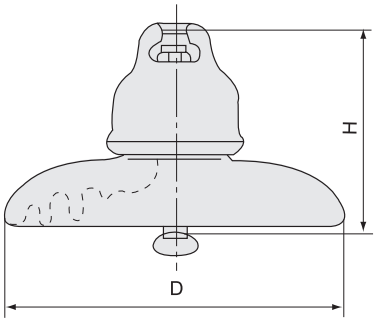

Fig 2

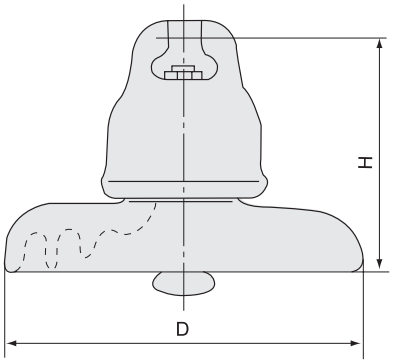

Fig 3

Cat.No			A1008	A1009	A1010	A1011
Fig			2	1	2	2
Class standard			XP-70-A	XP-70C-A	XP-125-A	XP-160-A
Main Dimensions(mm)	D		254	254	254	254
	H		146	146	146	146
Creepage Distance (mm)			292	292	292	317.2
Flashover Voltage	Power-frequency	Dry (kV)	75	75	75	78
		Wet (kV)	45	45	45	45
Electromechanical failing load (kN)			70	70	125	160
Power-frequency puncture Volage(kV)			120	120	120	160
Lighting full-wave impulse withstand voltage(peak) minimum (kV)			100	100	100	110
Weight (kg)			4.5	4.5	-	6.5
Applied standard			AS	AS	AS	AS

Cat.No			A1012	A1013	A1014	A1015
Fig			2	2	2	3
Class standard			XP-70-Y	XP-110-Y	XP-160-Y	XP-190-Y
Main Dimensions(mm)	D		254	254	254	279.4
	H		146	146	146	171
Creepage Distance (mm)			292	292	317.5	368.3
Flashover Voltage	Power-frequency	Dry (kV)	75	78	78	80
		Wet (kV)	45	45	45	47
Electromechanical failing load (kN)			70	110	160	190
Power-frequency puncture Volage(kV)			120	110	110	125
Lighting full-wave impulse withstand voltage(peak) minimum (kV)			100	100	100	110
Weight (kg)			4.5	-	6.5	-
Applied standard			BS	BS	BS	BS

SHACKLE PORCELAIN INSULATOR (BS)

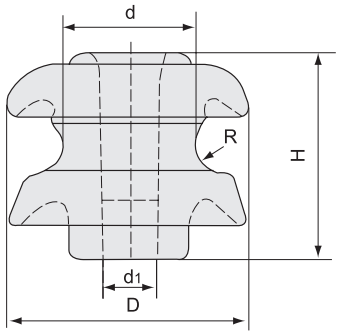

Fig 1

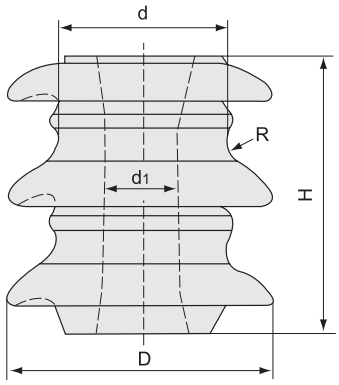

Fig 2

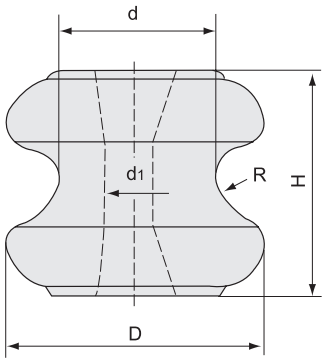

Fig 3

Cat.No			A1016	A1017	A1018	A1019	A1020	A1021
Fig			2	1	1	3	3	3
Class BS			ED-2(C)	ED-2(B)	ED-2(B)1	1617	1618-1	1618-2
Main Dimensions (mm)	H		80	76	76	65	75	75
	D		80	89	89	76	89	89
	d		50	48	48	46	55	55
	d1		22	21	17.5	17.6	17	17
	R		6	10	10	9	12.5	12.5
Mechanical failing load (kN)			13	12	12	9	10	13
Minimum flashover voltage	Power-frequency	Dry (kV)	25	25	25	20	20	25
		Wet (kV)	25	12	12	9	9	12
Weight (kg)			0.50	0.50	0.50	0.4	-	-

POST PORCELAIN INSULATOR (ANSI)

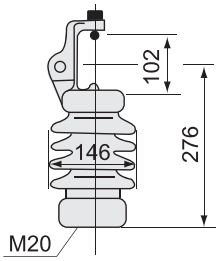

57-21

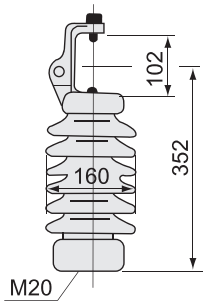

57-22

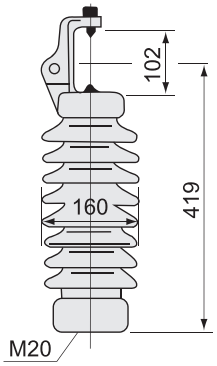

57-23

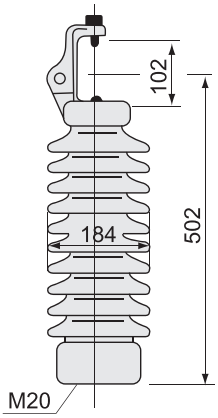

57-24

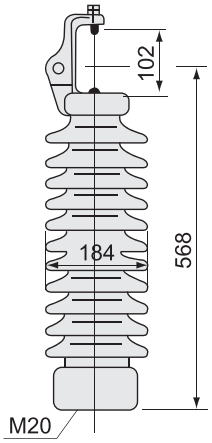

57-25

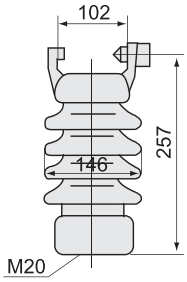

57-11

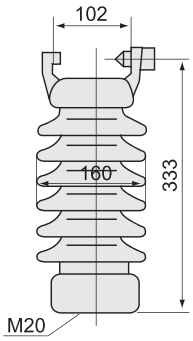

57-12

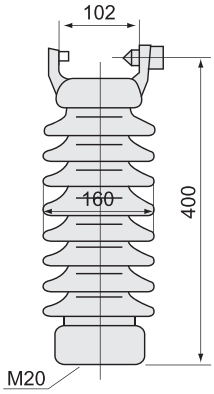

57-13

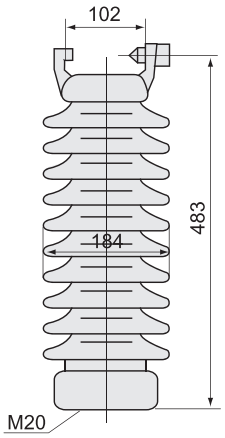

57-14

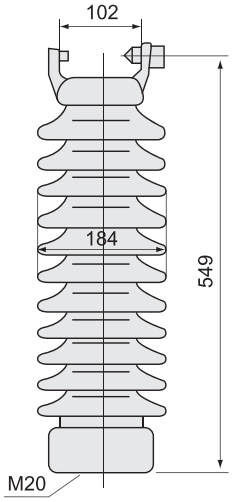

57-15

Cat.No.	A1034	A1035	A1036	A1037	A1038	A1039	A1040	A1041	A1042	A1043
ANSI Class	57-21	57-22	57-23	57-24	57-25	57-11	57-12	57-13	57-14	57-15
Creepage distance (mm)	356	559	737	1015	1145	356	559	737	1015	1145
Dry arcing distance (mm)	165	241	311	368	438	165	241	311	368	438
Cantilever strength (kN)	12.5	12.5	12.5	12.5	12.5	12.5	12.5	12.5	12.5	12.5
Low frequency dry flashover (kV)	80	110	125	150	175	80	110	125	150	175
Low frequency wet flashover (kV)	70	100	115	135	160	60	85	100	125	150
Critical impulse flashover, Pos (kV)	130	180	210	255	290	130	180	210	225	290
Critical impulse flashover, Neg (kV)	155	205	260	340	380	155	205	260	340	380
Test voltage to ground (kV)	15	22	30	44	44	15	22	30	44	44
Maximum RIV at 1000KHz (μ V) 1000KHz	100	100	200	200	200	100	100	200	200	200
Net weight, approx (kg)	7.5	10.5	12.7	16.8	19.5	6.8	10	11.8	15.9	18.6
Number in standrad package	6	3	3	2	2	6	3	3	2	2

POST PORCELAIN INSULATOR (ANSI)

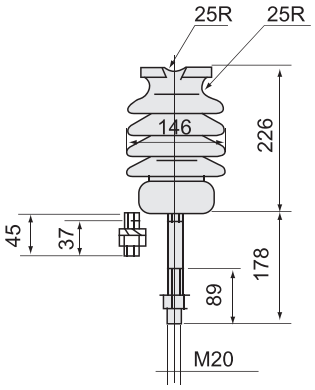

57-1S & 1L

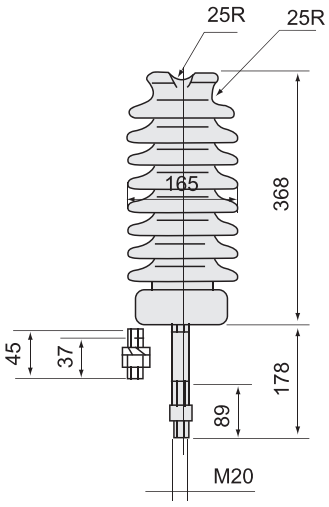

57-3S & 3L

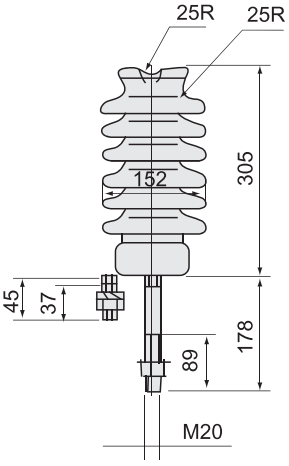

57-2S & 2L

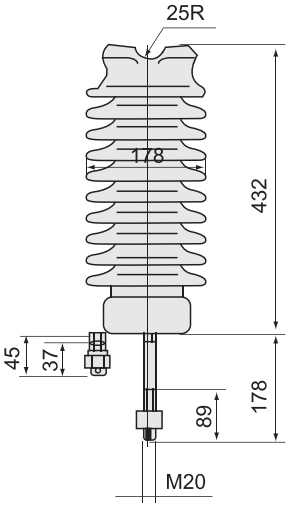

57-4S & 4L

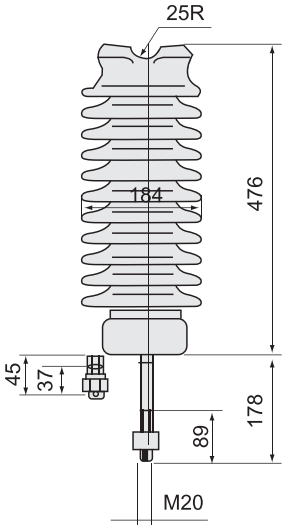

57-5S & 5L

Cat.No.	A1044S A1044L	A1045S A1045L	A1046S A1046L	A1047S A1047L	A1048S A1048L
ANSI Class	57-1S 57-1L	57-2S 57-2L	57-3S 57-3L	57-4S 57-4L	57-5S 57-5L
Creepage distance (mm)	356	559	737	1015	1143
Dry arcing distance (mm)	165	241	311	368	438
Cantilever strength (kN)	12.5	12.5	12.5	12.5	12.5
Low frequency dry flashover (kV)	80	110	125	150	175
Low frequency wet flashover (kV)	60	85	100	125	150
Critical impulse flashover, Pos (kV)	30	180	210	255	290
Critical impulse flashover, Neg (kV)	155	205	260	340	380
Test voltage to ground (kV)	15	22	30	44	44
Maximum RIV at 1000KHz (μ V) 1000KHz	100	100	200	200	200
Net weight, approx (kg)	5.0	9.5	11	16	18
Number in standrad package	6	3	3	2	2

STRAIN PORCELAIN INSULATOR (ANSI)

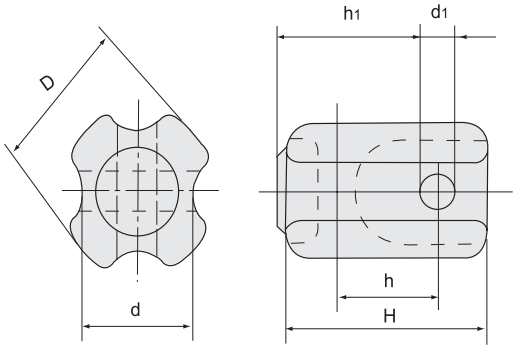

Fig 1

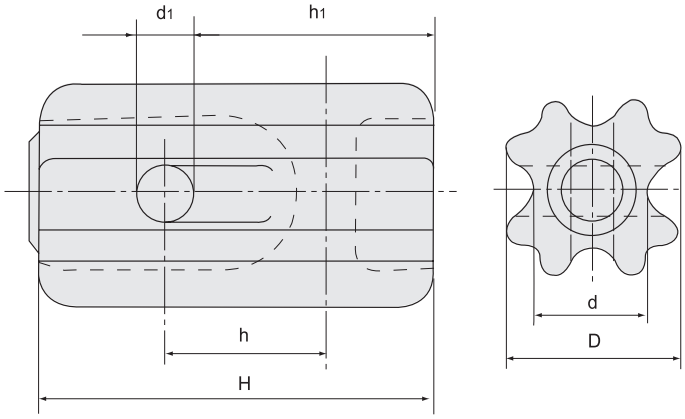

Fig 2

Cat.No.			A1049	A1050	A1051	A1052
Fig			1	1	1	2
Class ANSI			54-1	54-2	54-3	54-4
Main Dimensions (mm)	H		88	108	140	171
	h		44	57	79	69
	h_1		64	76	103	114
	D		64	73	86	89
	d		44	54	60	60
	d_1		16	22	25	25
Mechanical failing load (kV)			44	53	89	89
Creepage Distance (mm)			41	47	57	76
Flashover voltage	Power-frequency	Dry (kV)	25	30	35	40
		Wet (kV)	12	15	18	23
Weight (kg)			0.43	0.63	1.2	2

SPOOL PORCELAIN INSULATOR (ANSI)

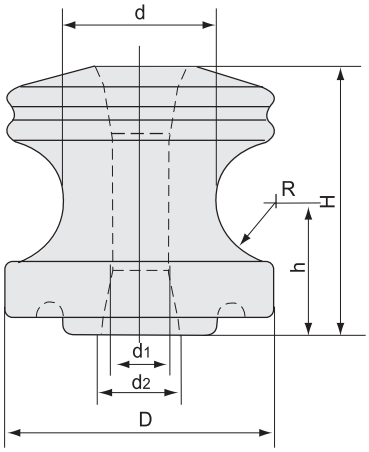

Fig 1

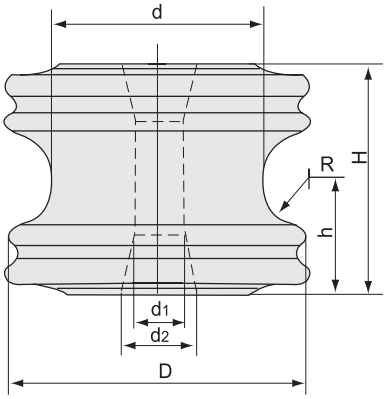

Fig 2

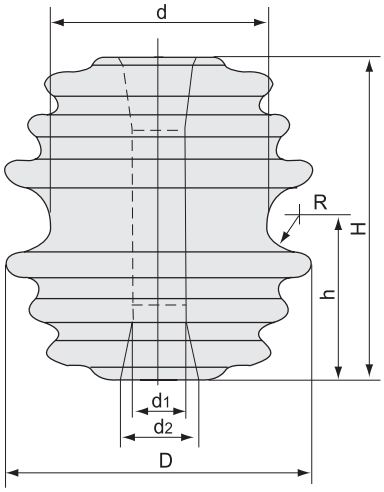

Fig 3

Cat.No.				A1053	A1054	A1055	A1056	A1057
Fig				2	1	2	2	3
Class ANSI				53-1	53-2	53-3	53-4	53-5
Main Dimensions (mm)	H			54	76	81	76	105
	h			27	38	40.5	38	52.5
	D			57	79	76	105	102
	d			45	45	45	73	73
	d_1			18	18	18	18	18
	d_2			22	24	24	24	24
	R			11	18	11	16	11
Mechanical failing load (kV)				907	1360	1814	2041	2722
Minimum flas-hover voltage	Power-frequency	Dry (kV)		20	25	25	25	25
		Wet (kV)	Upright	8	12	12	12	18
			Level	10	15	15	15	25
Weight (kg)				0.22	0.55	0.60	1.15	1.20

SUSPENSION PORCELAIN INSULATOR (ANSI)

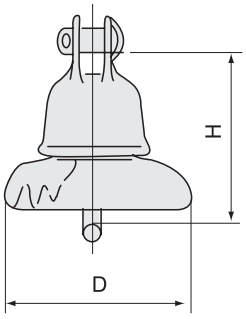

Fig 1

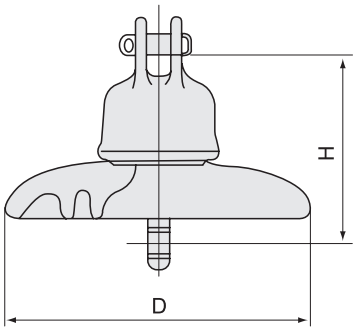

Fig 2

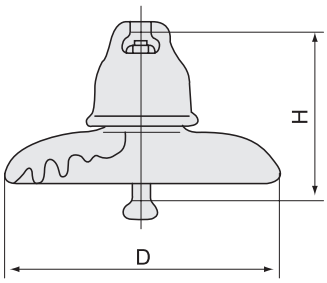

Fig 3

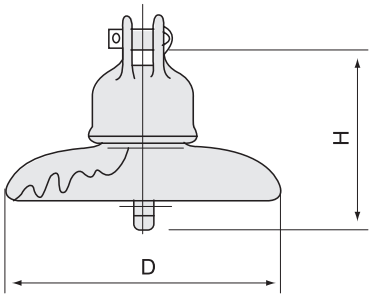

Fig 4

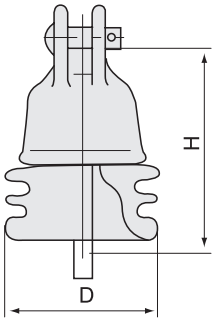

Fig 5

Cat.No.			A1058	A1059	A1060	A1061	A1062	A1063	A1064	A1065
Fig			1	2	3	4	3	4	5	4
Class ANSI			52-1	52-2	52-3	52-4	52-5	52-6	52-9	52-10
Main Dimensions (mm)	D		165	190.5	254	254	254	254	114	279.4
	H		139.7	146	146	146	146	146	160	165
Creepage disance (mm)			178	210	292	292	279	279	171	279
Power-frequency puncture voltage (kV)			80	90	110	110	110	110	80	110
Average Flashover Voltage	Power-frequency	Dry (kV)	60	65	80	80	80	80	60	80
		Wet (kV)	30	35	50	50	50	50	30	50
	Critical-impulse 15x40 μ s wave	Positive (kV)	100	115	125	125	125	125	90	125
		Negative (kV)	100	115	130	130	130	130	100	130
Radio-influence voltge data	Test voltage to ground (kV)		7.5	7.5	10	10	10	10	7.5	10
	Maximum RIV at 1000kHz(μ V)		50	50	50	50	50	50	50	50
Electromechanical faiting load (kN)			44	67	67	67	111	111	44	160
Mechanical impact strength (n.m)			5	5.5	5.5	6	7	7	5	10
Time load test value (kn)			27	44	44	44	67	67	27	107

PIN PORCELAIN INSULATOR (ANSI)

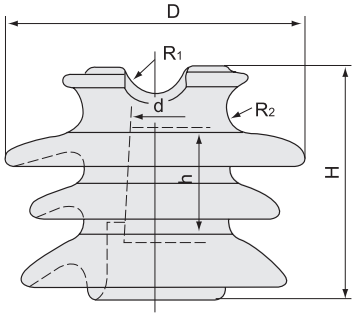

Fig 1

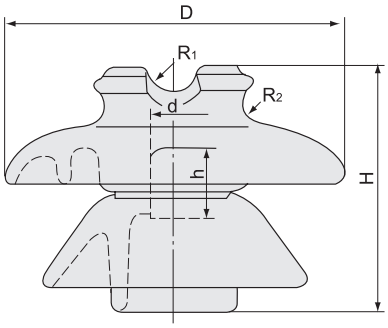

Fig 2

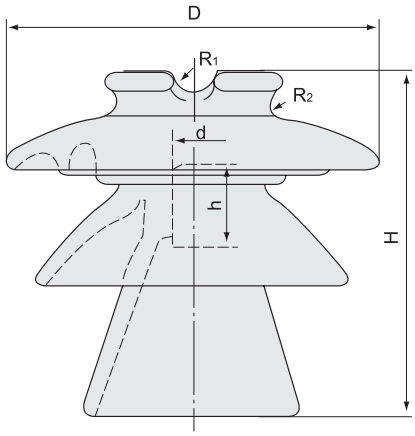

Fig 3

Cat.No.			A1066	A1067	A1068	A1069	A1070
Fig			1	1	2	2	3
Class ANSI			56-1	56-2	56-3	56-4	56-5
Main Dimensions (mm)	H		146	165	191	241	318
	h		50.8	50.8	50.8	50.8	63.5
	D		191	228	267	305	343
	d		34.9	34.9	34.9	34.9	34.9
	d_1		19	19	19	19	19
	R_2		14	14	14	14	14
Nominal voltage (kV)			23	23	35	46	69
Creepage distance (mm)			330	430	533	685	865
Minimum Flashover Voltage	Power-frequency	Dry (kV)	95	110	125	140	175
		Wet (kV)	60	70	80	95	125
	50% Impulse	Positive (kV)	150	175	200	225	270
		Negative (kV)	190	225	265	310	340
Radio-influence voltge data	Test voltae to ground (kV)		15	22	30	30	44
	Maximum RIV at 1000kHz (kV)		100	100	200	200	200
Low-frquency puncture puncture voltage average (kV)			130	145	165	186	225
Dry arcing dislance (mm)			178	210	241.3	285	356
Cantilever Failing Load (kN)			1134	1360	1360	1360	1360
Weight (kg)			3.7	5.3	7	10.8	13.5

PIN PORCELAIN INSULATOR (ANSI)

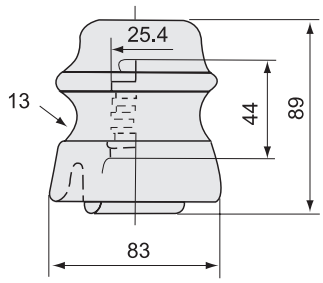

55-1

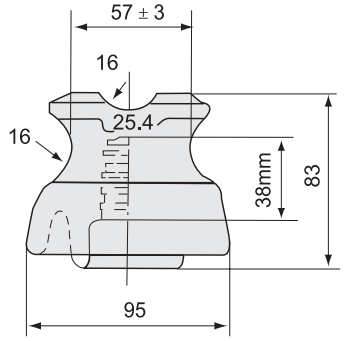

55-2

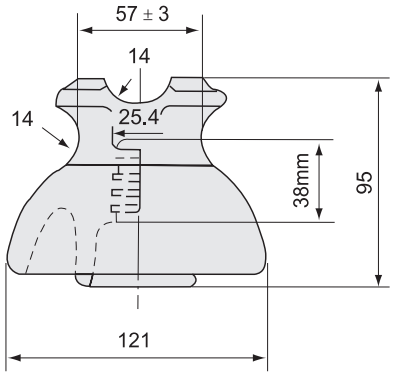

55-3

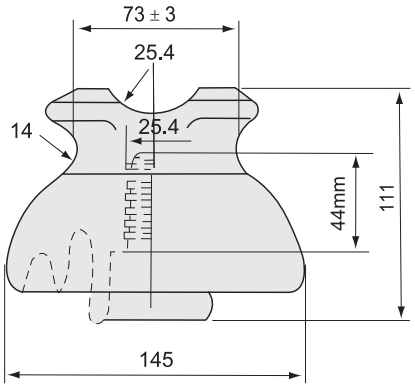

55-4

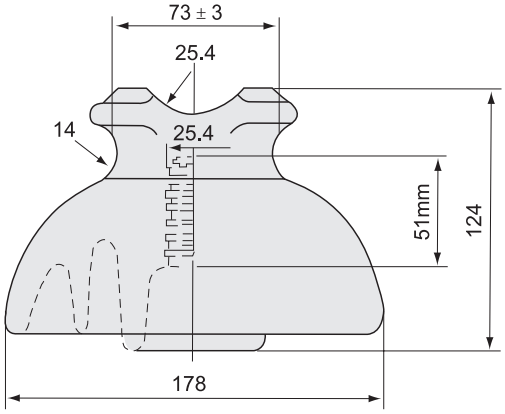

55-5

Cat.No.	A1071	A1072	A1073	A1074	A1075
Class ANSI	55-1	55-2	55-3	55-4	55-5
Creepage distance (mm)	102	127	178	229	305
Dry arcing distance (mm)	57	86	114	127	159
Cantilever strength (kN)	13	11	11	13	13
Low frequency dry flashover voltage (kV)	35	45	56	65	80
Low frequency wet flashover voltage (kV)	20	25	30	35	45
Critical impulse flashover, Pos (kV)	50	70	90	105	130
Critical impulse flashover, Neg (kV)	70	85	110	130	150
Power-frepuency puncture voltage (kV)	50	70	90	95	115
Test voltage to ground (kV)	5	5	10	10	15
Maximum RIV at 1000KHz (μ V)	50	50	50	50	100
Net weight, Each, Approx (kg)	0.5	0.65	1	1.55	2.75
Number in standrad package	60	40	30	16	12

ELECTRIC POWER
FITTING
Series

XGU TYPE MALLEABLE CAST-IRON CUSPENSION CLAMPS

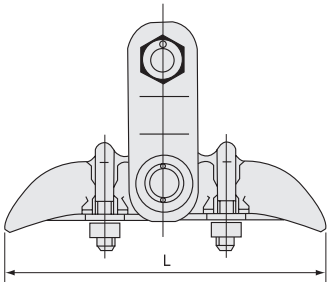

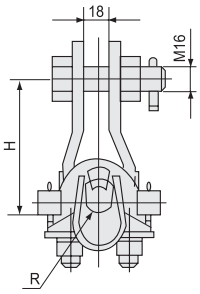

Type	Suitable conductor (with wraps)	Dimensions(mm)			Ultimate load not less than (kN)	Weight (kg)
		H	L	R		
XCU-1	5.0~7.0	82.5	180	4.0	≥40	1.4
XCU-2	7.10-13.0	82	200	7.0	≥40	1.8
XCU-3	13.1-21.0	101	220	11.0	≥40	2.0
XCU-4	21.1-26.0	109	250	13.5	≥40	3.0

NLL TYPE ALUMINUM ALLOY STRAIN CLAMP(BOLT TYPE)

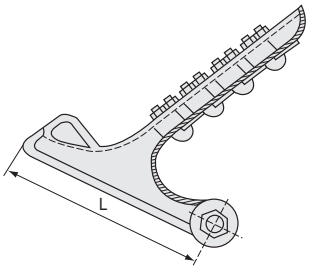

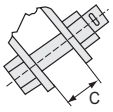

Type	Conductor Dia.(mm)	Section of applicable conductor(mm^2)	Dimensions(mm)		U-shape screw(No.)	Failing load not less than (kN)
			L	C		
NLL-1	5.1~14.5	16-50	131	16.3	2	40
NLL-2	11.4~18	70-120	125	22.4	2	40
NLL-3	15.7~23	150-240	232	25	3	70
NLL-4	19~25.2	300	285	30	3	90

NLD TYPE STRAIN CLAMP

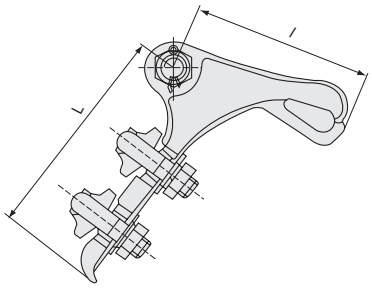

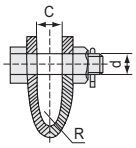

Type	Section of applicable conductor(mm^2)	Dimensions(mm)					Failing load not less than(kN)	Weight (kg)
		d	C	L	l	R		
NLD-1	16-50	16	18	150	120	6.5	20	1.3
NLD-2	70-120	16	18	205	130	8.0	40	2.1
NLD-3	150-240	18	22	310	160	11.0	70	4.6
NLD-4	300	18	25	410	220	12.5	90	7.0

Q, QP TYPE BALL-EYES

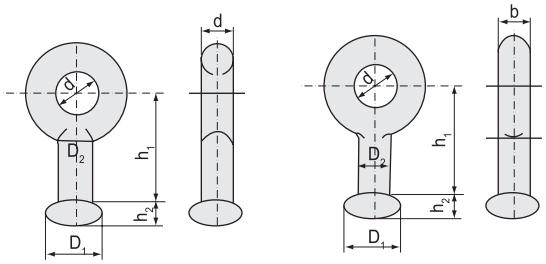

Type	Suitable section of conductor(mm)	Dimensions(mm)						Failure load (kN)	Weight (kg)
		D1	D2	d	b	h1	h2		
Q-7	XP-7	33.3	17	22	16	50	13.4	70	0.3
QP-7	XP-7 X-4.5	33.3	17	20	16	50	13.4	70	0.3
QP-10	XP-10	33.3	17	20	16	50	13.4	100	0.3
QP-16	XP-16	41.0	21	26	20	60	19.5	160	0.5
QP-20	XP-20	49.0	25	30	24	80	21.0	200	1.0
QP-21D	XP-21	41.0	21	29	24	70	19.5	210	1.0
QP-30	XP-30	49.0	25	39	30	80	21.0	300	1.1

U TYPE SHACKLES

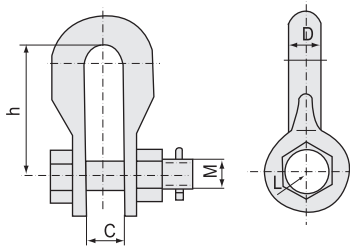

Type	Dimensions(mm)					Failure load (kN)	Weight (kg)
	C	M	D	h	r		
U-7	20	16	16	60	22	70	0.5
U-7B	20	16	16	80	22	70	0.6
U-10	22	18	18	70	24	100	0.6
U-10B	22	18	18	85	23	100	0.7
U-12	24	22	20	80	30	120	1.0
U-16	26	24	22	90	32	160	1.5
U-16T	28	24	22	90	32	160	1.5
U-20	30	27	24	100	36	200	2.3
U-20B	30	27	24	115	36	200	2.4
U-25	34	30	26	110	40	250	2.8
U-30	38	36	30	130	46	300	3.7
U-50	40	42	36	150	55	500	7.0

W TYPE BALL-CLEVIES

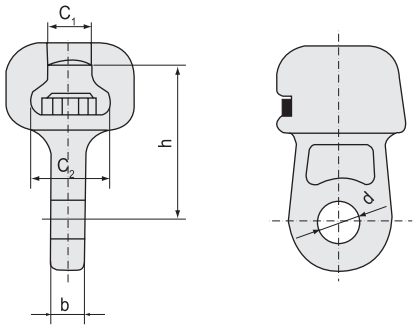

Type	Suitable insulation	Dimensions(mm)					Failure load (kN)	Weight (kg)
		C1	C2	h	d	b		
W-7A	XP-7 XP-4.5	19.2	34.5	70	20	16	70	0.8
W-7B	XP-7 X-4.5	19.2	34.5	115	20	16	70	0.9
W1-10	XP-10	19.2	34.5	85	20	18	100	1.0

UNPARALLEL-GROOVE CLAMP AND INSULATING COVER

JY CONNECTING PIPE

SLG BLOT TYPE TERMINAL CONECTOR

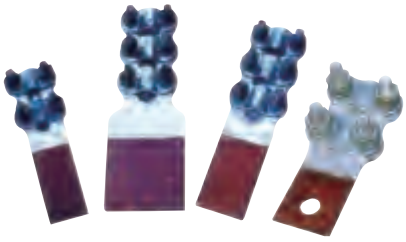

JB、JBTL、JBT PARALLEL-GREOVE CLAMP

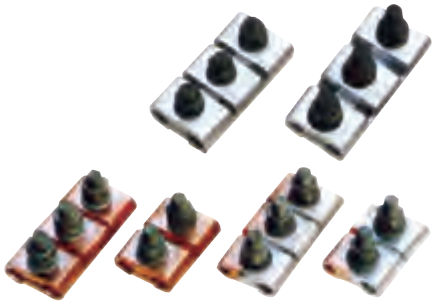

APG、CAPG AL、CO-AL. UNCOMBIED CLAMP

GAPG-C CO.-AL.UNPARALLEL-GROOVE CLAMP

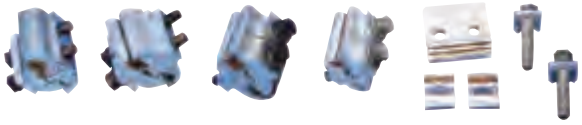

This brochure is made from recycled paper.
© Design and specifications subject to change without notice in accordance with our policy of continuous product improvement.

EZITOWN ELECTRIC CO.,LTD.

E-mail:sales@ezitown.com

Mobile(WhatsApp):+86-13566125299

Sales Agent: