ZHEJIANG EZITOWN ELECTRIC CO.,LTD

PROFORMA INVOICE

49,Jinma WS RD,Liushi,Yueqing,Zhejiang,China 325604
TEL:0086-577-27885553 FAX:0086-577-27885554 E-MAIL:sales@ ezitown.com

CABLE GLAND DIMENSIONS

		a	b	c	e	d	f	g
overview	SIZE2	34	M25*1.5	21	20.6	10	38.2	34.8
	SIZE3	35.6	M32*1.5	27.2	27	10.5	45.4	40.8
	SIZE6	55.5	M63*1.5	56.5	56	14	88	79.8

		A6	A7	A8	A4,A3	A10	A5	X1
1.NUT	SIZE2	18	9.5	6	33.8	11.8	26	M32*1.5
	SIZE3	21	10	8	39.8	13.8	32	M38*1.5
	SIZE6	34.8	16	15	77.2	24.8	67.2	M73*1.5

		C1	C5	C3				
2.GLAND	SIZE2	29.7	8.6	22.5				
	SIZE3	35.7	9.2	29.5				
	SIZE6	70.5	16.5	61				

		B4	B5	B6	X2	X3	B7	
3.GLAND	SIZE2	14	4.8	4.3	M25*1.5	M32*1.5	8	
	SIZE3	15.5	4.8	4.3	M32*1.5	M38*1.5	9	
	SIZE6	25	7.2	6.7	M63*1.5	M73*1.5	17.5	

		D2	D1	X4				
4.BODY	SIZE2	18	21	M25*1.5				
	SIZE3	19.5	27.2	M32*1.5				
	SIZE6	31.6	56.5	M63*1.5				

		E3	E1	E2	X5			
5.NUT	SIZE2	4.3	34.8	38.2	M25			
	SIZE3	4.8	40.8	45.4	M32			
	SIZE6	6.7	79.8	88	M63			

Unit(MM)

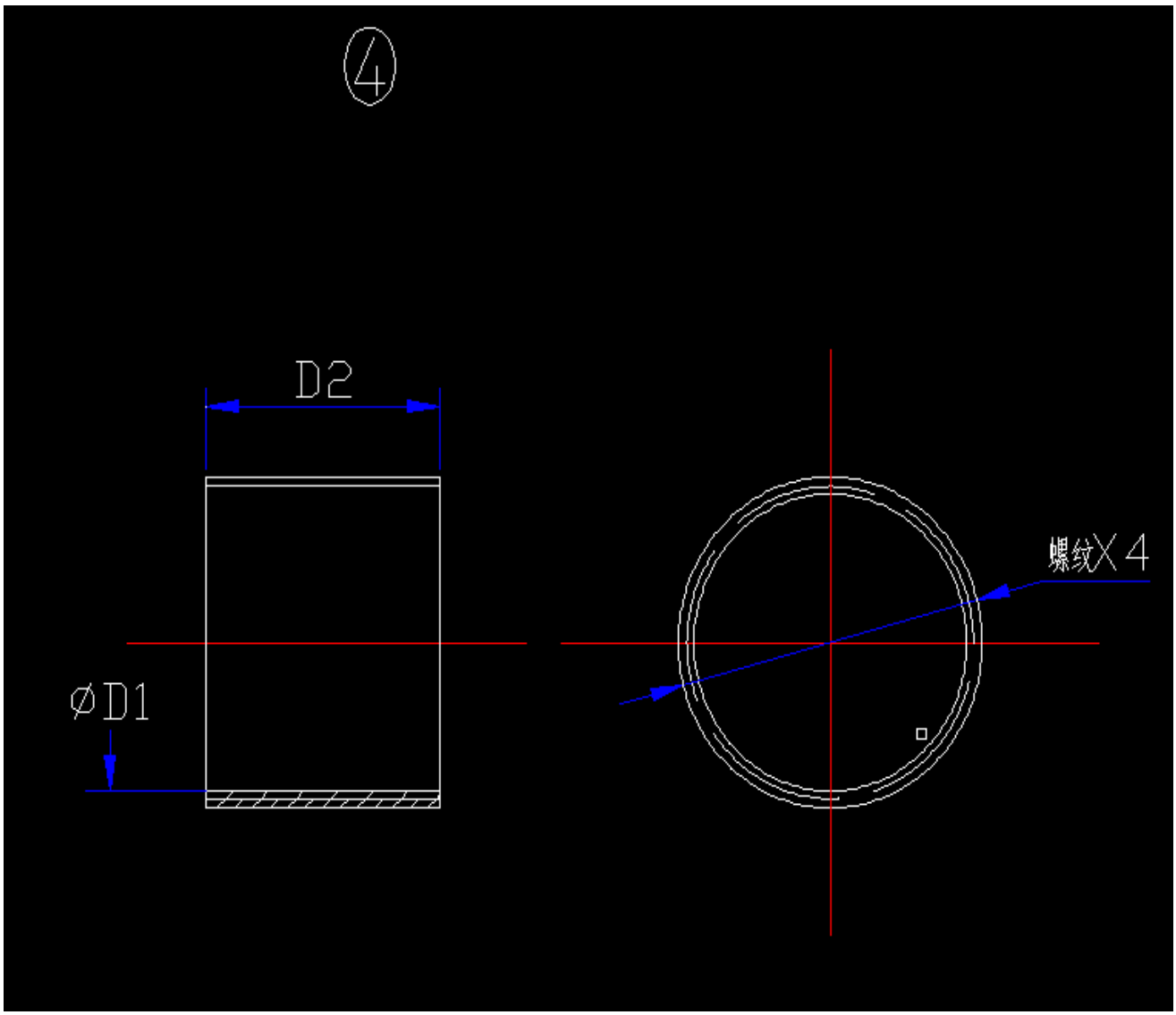
4
D2
ØD1
螺纹X4

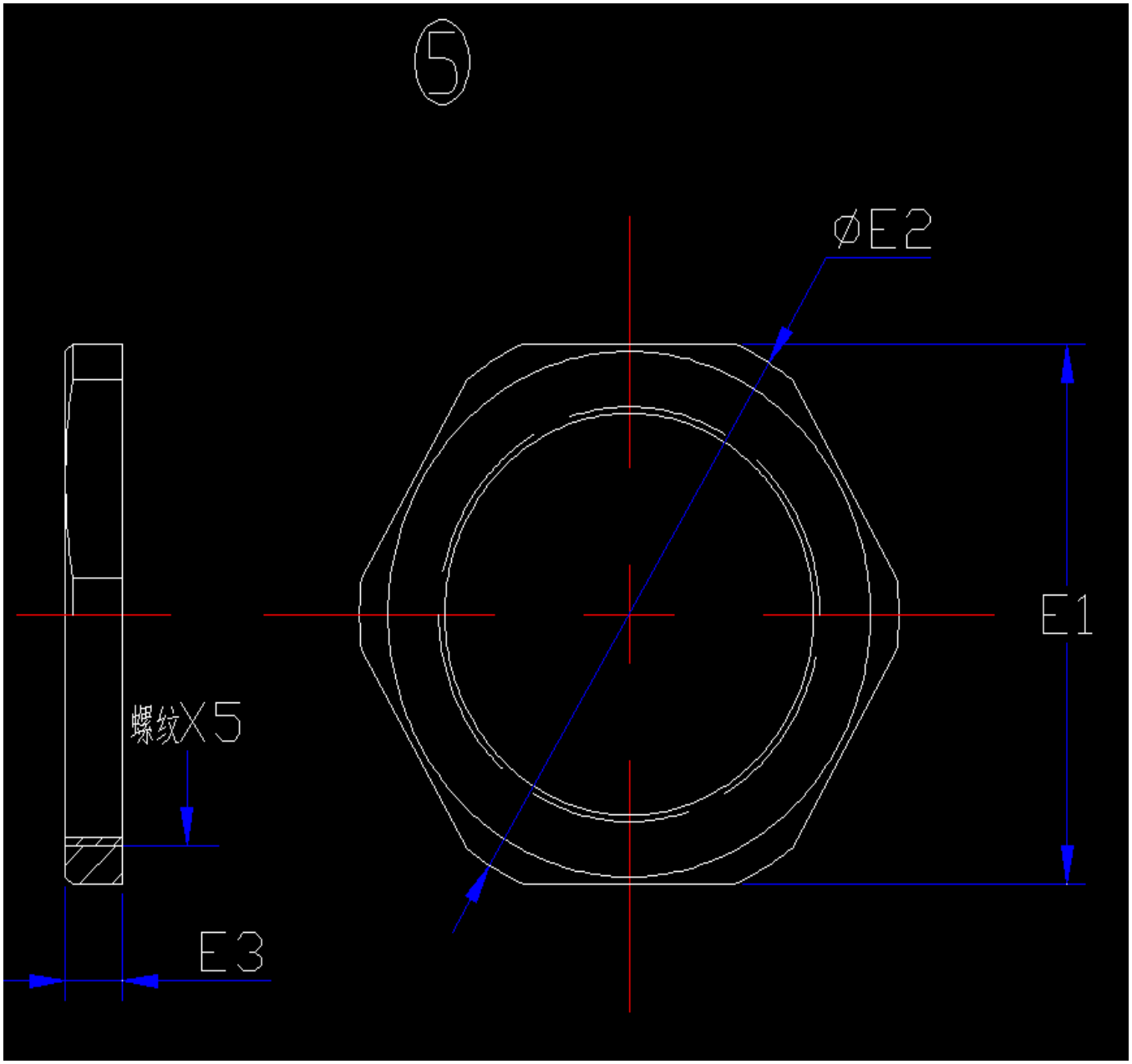
5
ØE2
E1
螺纹X5
E3

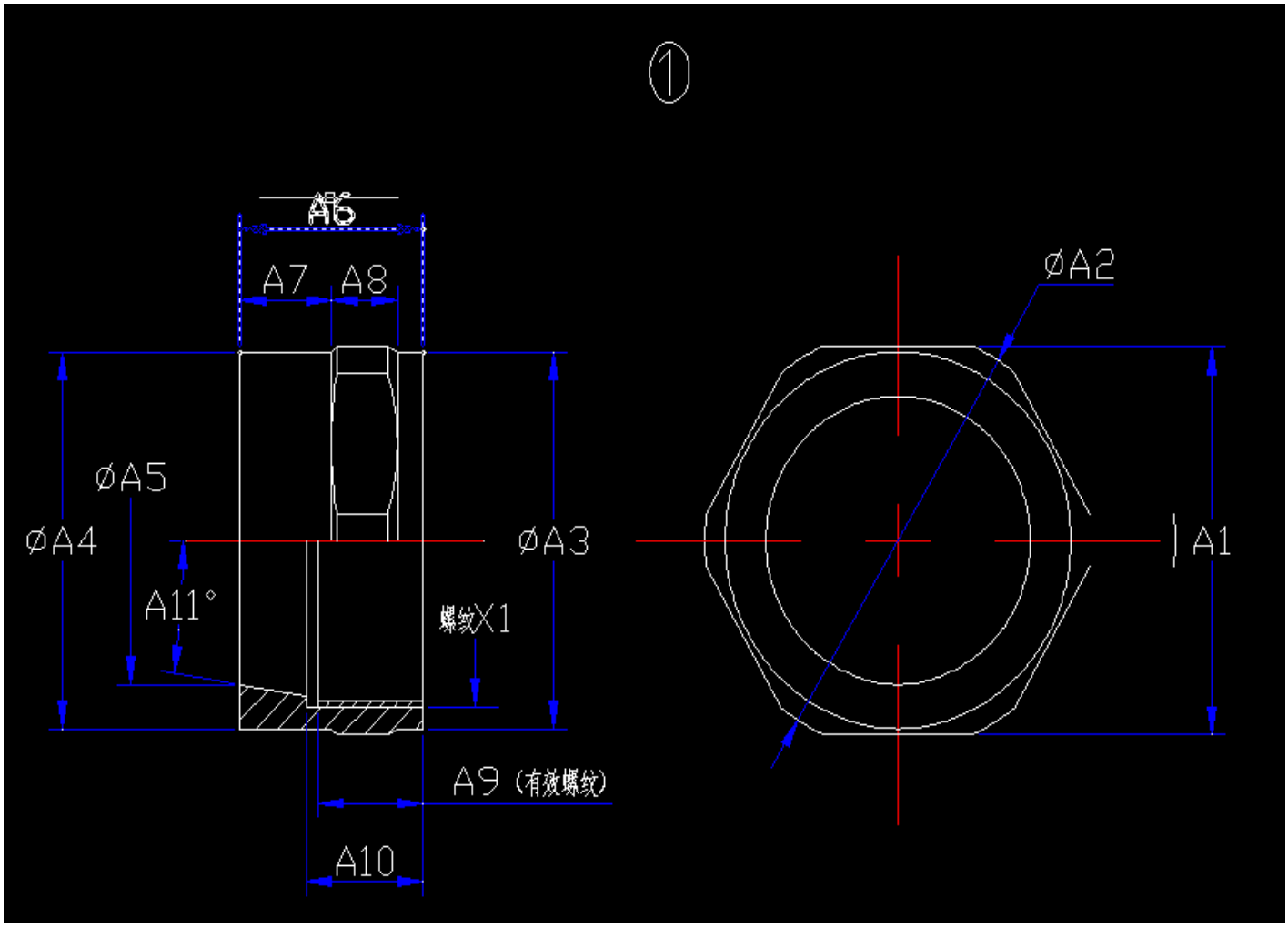
①
A6
A7
A8
ØA5
ØA4
ØA3
A11°
螺纹X1
A9（有效螺纹）
A10
ØA2
A1

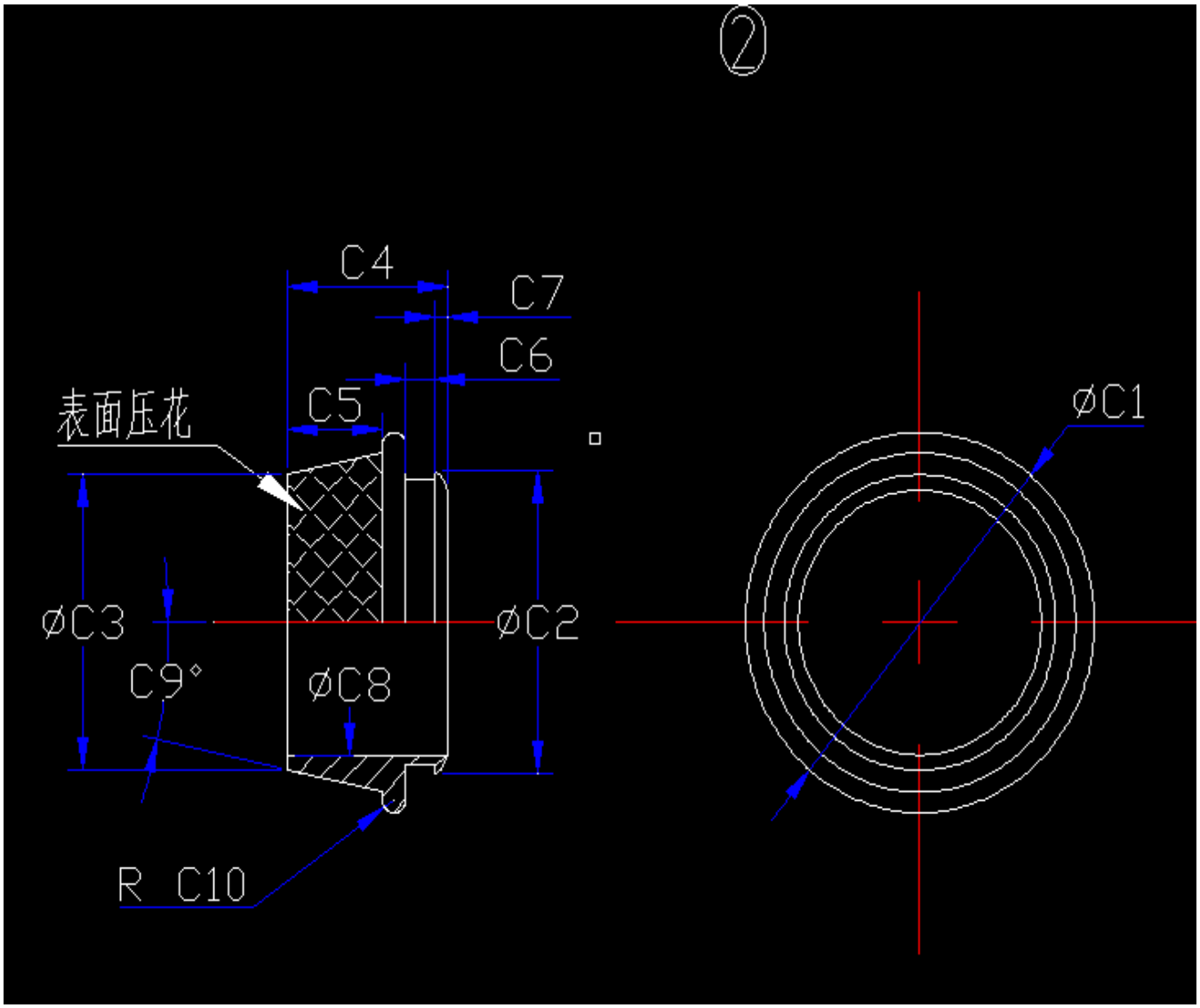
②
C4
C7
C6
C5
表面压花
ØC1
ØC3
ØC2
C9°
ØC8
R C10

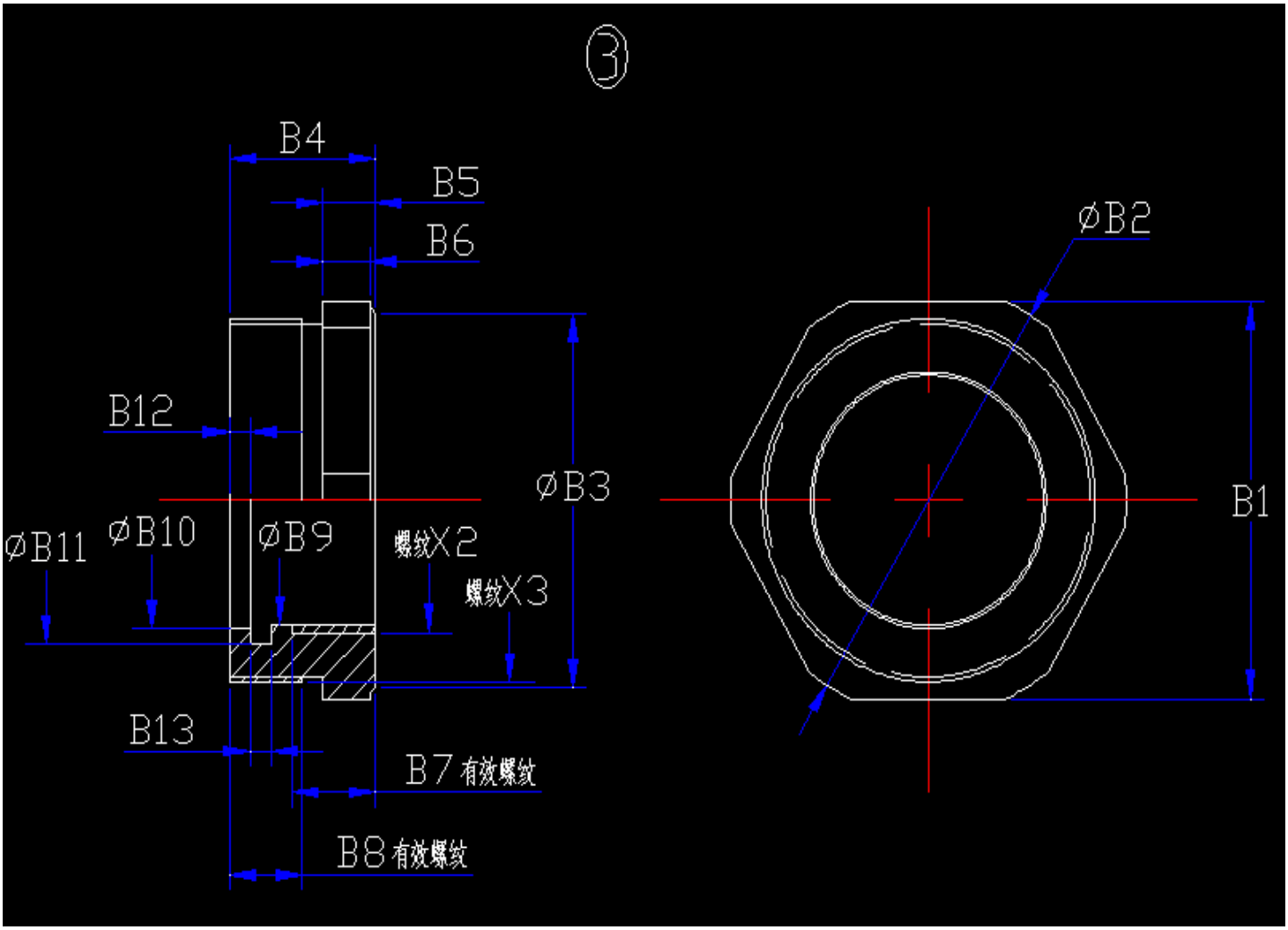
③
B4
B5
B6
B12
ØB3
ØB11
ØB10
ØB9
螺纹X2
螺纹X3
B13
B7 有效螺纹
B8 有效螺纹
ØB2
B1

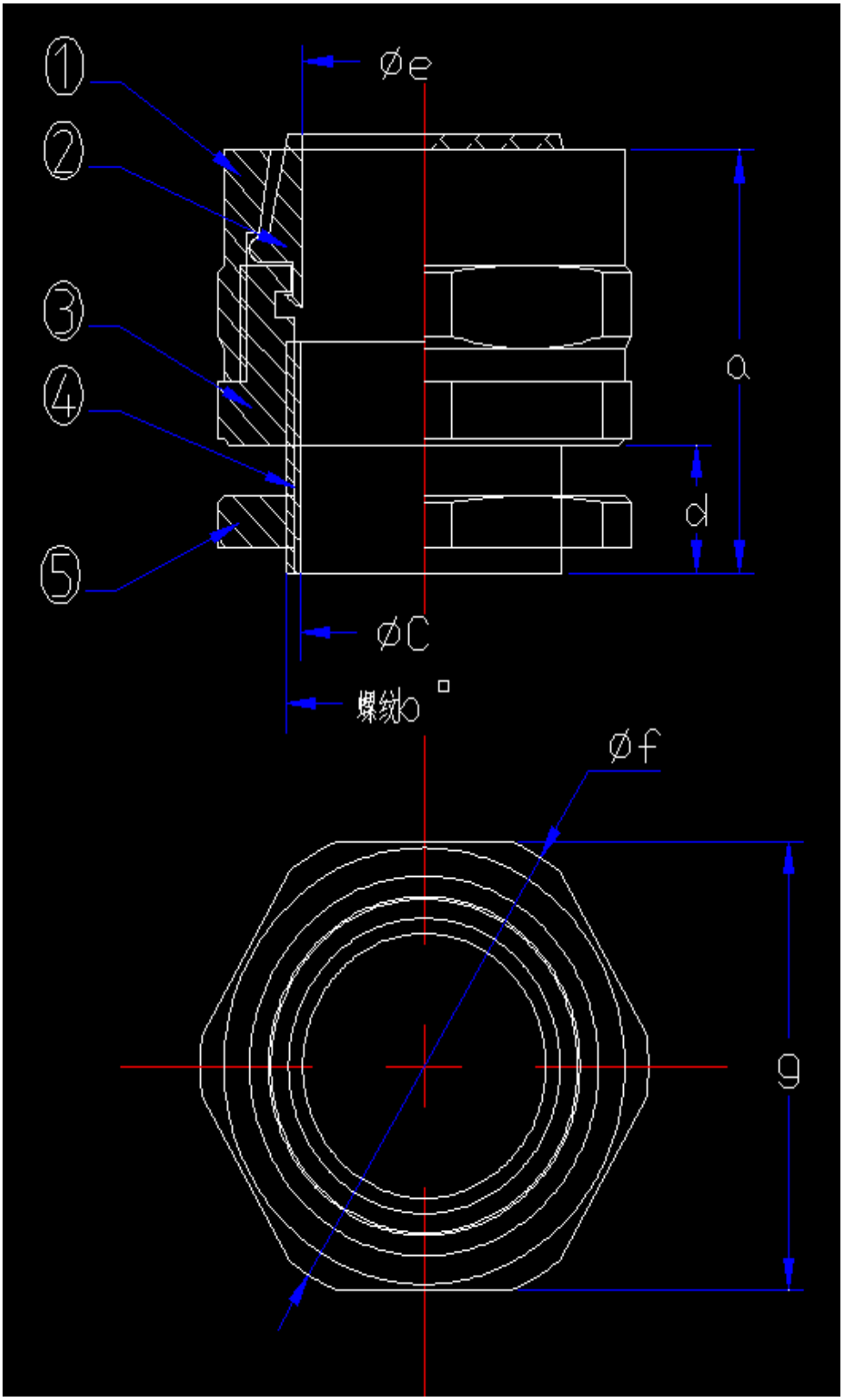
①
②
③
④
⑤
Øe
a
d
ØC
螺纹b
Øf
g