MAJOR ENDUSER

RURAL ELECTRIFICATION AGENCY
Magetsi kumusha, Amagetsi ekhaya

NOIC
NATIONAL OIL INFRASTRUCTURE COMPANY OF ZIMBABWE (PVT) LTD
Sustainable Fuelling Logistics

NetOne The World in One

TelOne Bringing You Together

ZESA enterprises

ZETDC

NGCP

DESCO POWER IS YOURS

VOLTA RIVER AUTHORITY

UMEME Powering Uganda

PEDE

ZAMECO I

UGANDA ELECTRICITY DISTRIBUTION COMPANY LIMITED

REA

UETCL™ Uganda Electricity Transmission Compan

የኢትዮጵያ ኤሌክትሪክ ኃይል
ETHIOPIAN ELECTRIC POWER

edenorte

TANZANIA ELECTRIC SUPPLY COMPANY LIMITED
We light up your life

EVN

GPA 50 YEARS

EPEC

EPE Energía de Santa Fe

ANDE

Rwanda Energy Group REG

برشنا د افغانستان برشنا شرکت

CORPORACIÓN FONAFE

GRIDCo Backbone to Power Delivery

Zhejiang Ezitown Electric Co., Ltd.

Tel: +86-571-22856285
Mobile(WhatsApp):+86-13566125299
Web: Www.ezitown.com
E-mail:sales@ezitown.com
Ezitown@qq.com
Add:49Jinma Ws Rd,Liushi,Yueqing,Zhejiang,China 325604

This brochure is made from recycled paper.
© Design and specifications subject to change without notice in accordance with our policy of continuous product improvement.

ezitown ELECTRIC SOLUTIONS

Stanley Huang Sales Manager
Zhejiang Ezitown Electric Co., Ltd.

Add:49Jinma Ws Rd,Liushi,Yueqing,Zhejiang,China325604
Tel: +86-571-22856285
Mobile(WhatsApp):+86-13566125299
Web:www.ezitown.com
E-mail:sales@ezitown.com Ezitown@qq.com

ezitown
ELECTRIC SOLUTIONS

Substation / Transmission / Distribution and Overhead Line Equipments

Expulsion fuse cutout

Fuse links for expulison fuse cutout

High voltage current-limiting fuse

Surge arrester

Composite insulator

Porcelain insulator

Disconnect switch and Load break switch

ezitown

ELECTRIC SOLUTIONS

We are manufacturer of electrical equipments for substation, transmission,distribution and overhead line.

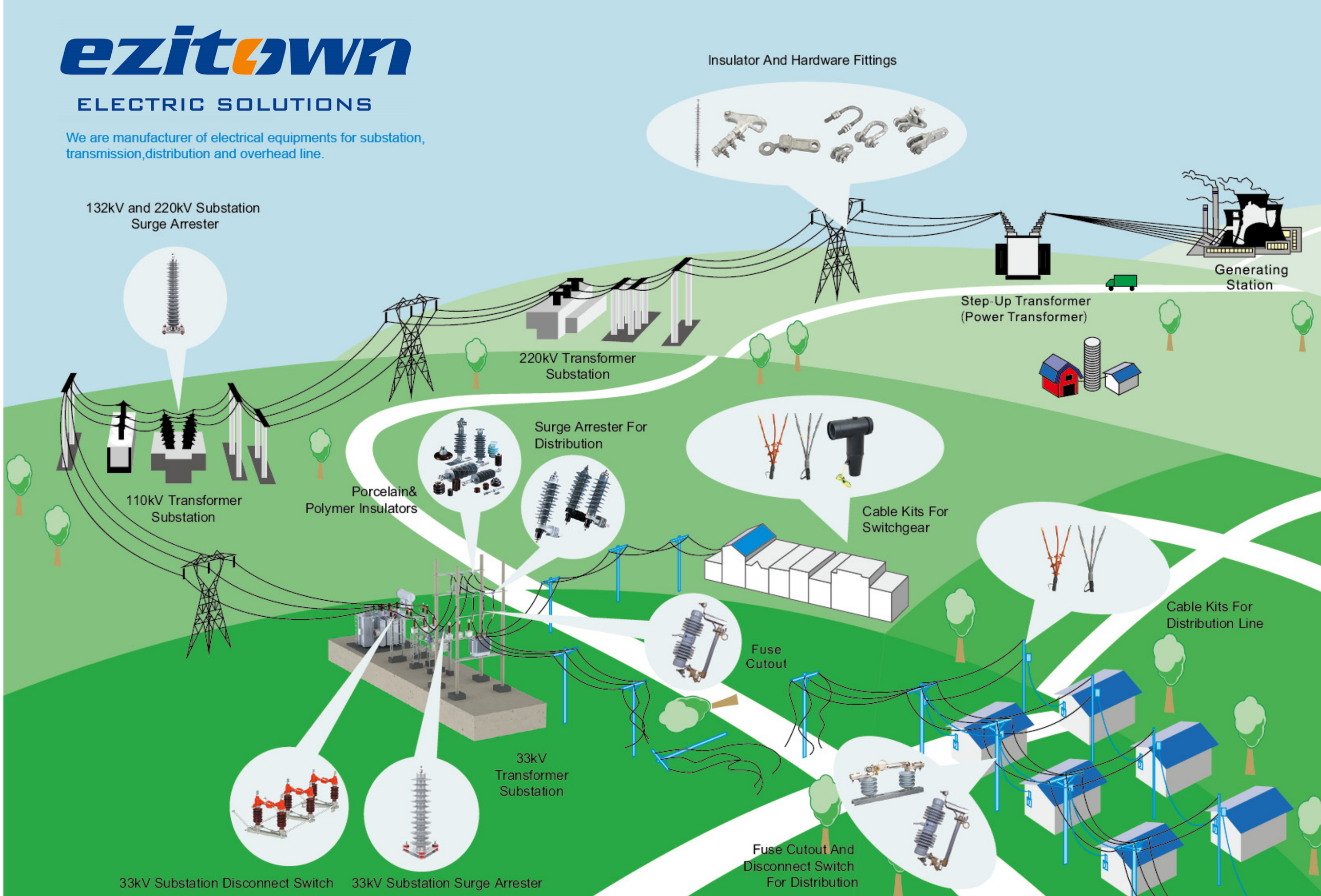

EXPULSION FUSE CUTOUT

ezitown
ELECTRIC SOLUTIONS

Standard Cutout

All Type of Cutouts meet or exceed IEC/ANSI/NEMA specifications.

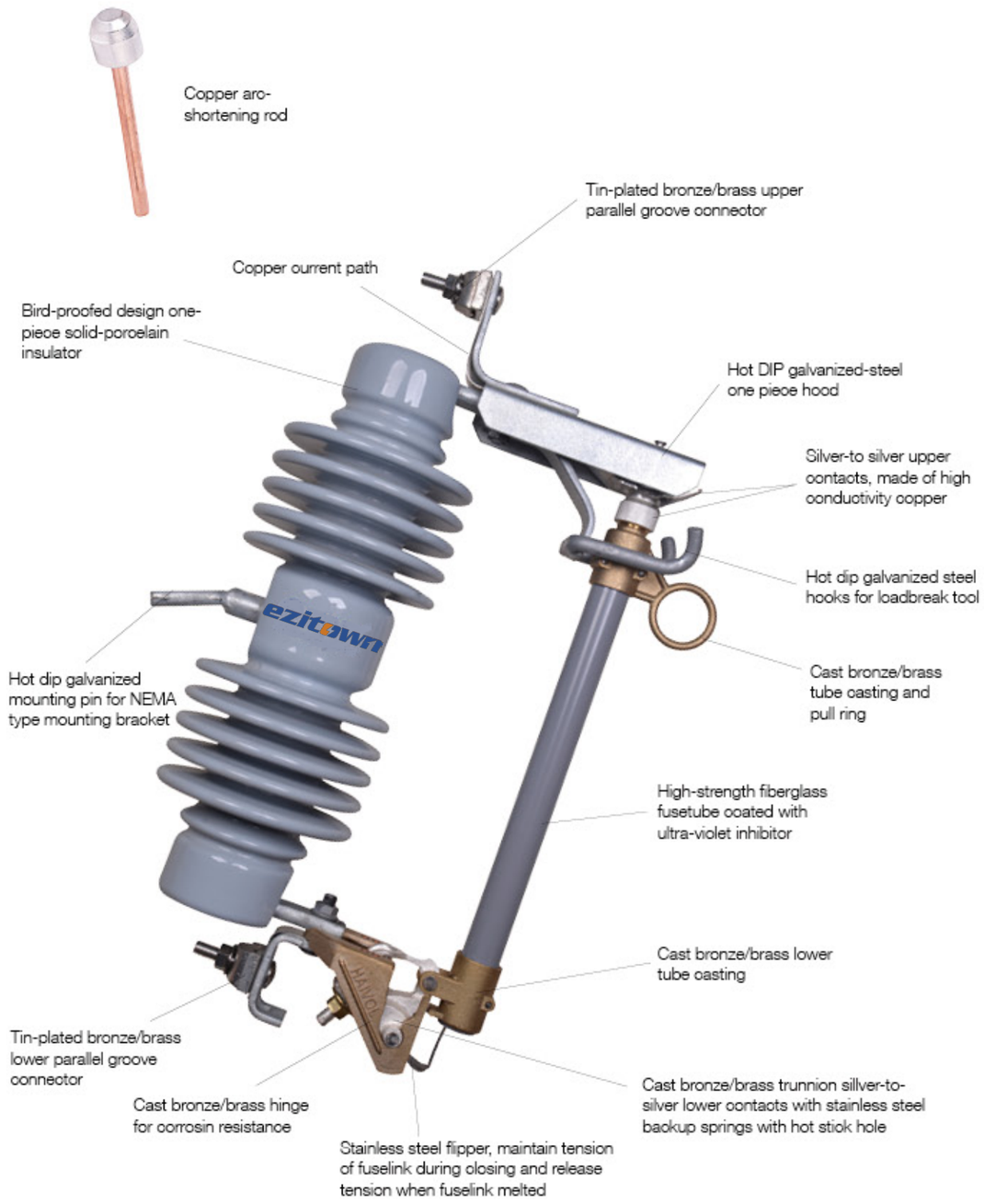

Expulsion Fuse Cutout

Product features

High performance of weather aging resistance

- For porelain insulator, the porcelain body connects with hardware fitting by cement pouring, we use the (por-rok)ANCHORING cement manufactured by CGM INC from USA. This kind of cement has rapid solidification, high mechanical strength, low expansion coefficient and superior weather resistance.

- For polymer insulator, the hardware fitting crimped onto fiberglass rod, material of housing and sheds manufacture of high-temperature Vulcanized Silicone Rubber, and the insulator moulded by one piece injection molding. It has good sealing performance and good performance of tracking and erosion resistance.

- All ferrous parts processed by hot dip galvanized, its zinc coating more than 86u, it has good corrosion resistance.

Design feature of single vent

- Our fuse cutout adopts the design feature of single vent, exhaust downwards and outwards when fuse cutout interrput. Prevent the intrusion of rainwater, avoid damage to the upper line by free gas, and this design can improve the interrpt capacity.
- It adopts Arc-shortening copper rod to improve the interrpt capacity when short circuit fault.

Excellent conductivity

- All copper casting part adopts bronze/brass, it has excellent mechanical strength and excellent conductivity.
- All contact parts be silver-plated, it adopts convex design on the contact surface, this design can reduce the contact resistance and ensure excellent conductivity.
- The high-strength memory cooper alloy sheets can ensure contact with lower contact smoothly and without any affecting when fuse drop out.

Reliable load breaking capacity

- For Loadbreak type fuse cutout, its arc chamber made of special reinforced nylon material. It has good mechanical strength, anti-aging and flame retardant. suitable for use the area like high ultraviolet area, high altitude area, coastal area, etc.

Relevant international executive standards

- All fuse cutouts we manufacture and test according to the latest international standard IEC 60282-2:2008 & IEEE Std C37.41-2008 & IEEE Std C37.42-2009.

Product categories

Model	Type of material for insulator		Product feature
	Porcelain	Polymer	
STANDARD cutout			Provide protection to the line of distribution system and the various apparatus on those line such as transformers and capacitor banks.It can also be used as a sectionalizing device.Using a portable loadbreak tool,it can function much like an overhead line disconnect switch. Maximum design voltage from 10Kv-38kv; Maximum Rating current 100-200A
LOADBREAK cutout			This LOADBREAK fuse cutout is available for application on 10kv to 38kv distribution system. The addition of the arc chute provides loadbreak capability for fuse cutouts. Also expands the flexibility of the protective devices.The loadbreak fuse cutout provides short circuit protection to overhead lines with the added feature of a loadbreaking function. Maximum rating current 100-200A
FUSE CUTOUT-ARRESTER Combinations			FUSE CUTOUT-ARRESTER Combination units install easily and faster,more economically,take up less space in storage,transit and service.Each combined unit takes up a minimum of space on the crossarm and has a favorable weight distribution for minimal off- center loading.FUSE CUTOUT fitted with surge arrester of HAIVOL brand.
DISCONNECT BLADE cutout			DISCONNECT BLADE cutout adopts design feature of fuse cutout,using cooper disconnect blade to replace fuse tube, be used as a sectionalizing device(disconnect switch) on 10kv to 38kv distribution system.It installed easily and faster,more economically,takes up a minimum of space on the crossarm. Rating current 300A-400A

Expulsion Fuse Cutout

Technical parameter

HV-1	Rated voltage(KV)	Rated current(A)	Rated interrupting current(KA)	Lightning impulse withstand voltage to ground (BIL KV)	Minimum power frequency withstand dry voltage to ground (KV)	Minimum creepage distance(mm)
	11-15	100/200	12	110	42	220
	11-15	100/200	12	125	50	320
	24-27	100/200	12	150	65	470
	33-38	100/200	8	170	70	660
	33-38	100/200	8	170	70	720
	33-38	100/200	8	170	70	900

HV-2	Rated voltage(KV)	Rated current(A)	Rated interrupting current(KA)	Lightning impulse withstand voltage to ground (BIL KV)	Minimum power frequency withstand dry voltage to ground (KV)	Minimum creepage distance(mm)
	11-15	100/200	12	110	42	220
	11-15	100/200	12	125	50	320
	24-27	100/200	12	150	65	470
	33-38	100/200	8	170	70	660
	33-38	100/200	8	170	70	720
	33-38	100/200	8	170	70	900

HV-3	Rated voltage(KV)	Rated current(A)	Rated interrupting current(KA)	Lightning impulse withstand voltage to ground (BIL KV)	Minimum power frequency withstand dry voltage to ground (KV)	Minimum creepage distance(mm)
	11-15	100/200	12	110	42	220
	11-15	100/200	12	125	50	320
	24-27	100/200	12	150	65	470
	33-38	100/200	8	170	70	660
	33-38	100/200	8	170	70	720
	33-38	100/200	8	170	70	900

HV-4	Rated voltage(KV)	Rated current(A)	Rated interrupting current(KA)	Lightning impulse withstand voltage to ground (BIL KV)	Minimum power frequency withstand dry voltage to ground (KV)	Minimum creepage distance(mm)
	11-15	100/200	12	110	42	220
	11-15	100/200	12	125	50	320
	24-27	100/200	12	150	65	470
	33-38	100/200	8	170	70	660
	33-38	100/200	8	170	70	720
	33-38	100/200	8	170	70	900

HV-5	Rated voltage(KV)	Rated current(A)	Rated interrupting current(KA)	Lightning impulse withstand voltage to ground (BIL KV)	Minimum power frequency withstand dry voltage to ground (KV)	Minimum creepage distance(mm)
	11-15	100/200	12	110	42	220
	11-15	100/200	12	125	50	320
	24-27	100/200	12	150	65	470
	33-38	100/200	8	170	70	660
	33-38	100/200	8	170	70	720
	33-38	100/200	8	170	70	900

Technical parameter

HV-6	Rated voltage(KV)	Rated current(A)	Rated interrupting current(KA)	Lightning impulse withstand voltage to ground (BIL KV)	Minimum power frequency withstand dry voltage to ground (KV)	Minimum creepage distance(mm)
	11-15	100/200	12	110	42	220
	11-15	100/200	12	125	50	320
	24-27	100/200	12	150	65	470
	33-38	100/200	8	170	70	660
	33-38	100/200	8	170	70	720
	33-38	100/200	8	170	70	900

HV-7	Rated voltage(KV)	Rated current(A)	Rated interrupting current(KA)	Lightning impulse withstand voltage to ground (BIL KV)	Minimum power frequency withstand dry voltage to ground (KV)	Minimum creepage distance(mm)
	11-15	100/200	12	110	42	220
	11-15	100/200	12	125	50	320
	24-27	100/200	12	150	65	470
	33-38	100/200	8	170	70	660
	33-38	100/200	8	170	70	720
	33-38	100/200	8	170	70	900

HV-8	Rated voltage(KV)	Rated current(A)	Rated interrupting current(KA)	Lightning impulse withstand voltage to ground (BIL KV)	Minimum power frequency withstand dry voltage to ground (KV)	Minimum creepage distance(mm)
	11-15	100/200	12	110	42	220
	11-15	100/200	12	125	50	320
	24-27	100/200	12	150	65	470
	33-38	100/200	8	170	70	660
	33-38	100/200	8	170	70	720
	33-38	100/200	8	170	70	900

HV-9	Rated voltage(KV)	Rated current(A)	Rated interrupting current(KA)	Lightning impulse withstand voltage to ground (BIL KV)	Minimum power frequency withstand dry voltage to ground (KV)	Minimum creepage distance(mm)
	11-15	300/400	16	110	42	220
	11-15	300/400	16	125	50	320
	24-27	300/400	16	150	65	470
	33-38	300/400	25	170	70	660
	33-38	300/400	25	170	70	720
	33-38	300/400	25	170	70	900

WARM TIPS

When order,please indicate the detailed information as below listed:

1) Rated voltage and rated current .
2) Minimum creepage distance.
3) The material of insulator.
4) Please indicate whether arc-shortening rod should be fitted with fuse cutout.
5) Please indicate the type of mounting bracket.

FUSE LINKS FOR EXPULISON FUSE CUTOUT

EZITOWN brand type K, type T, type H and type SLOW-FAST fuse link manufacture and test according to the latest international standard IEC 60282-2:2008 & IEEE Std C37.41-2008 & IEEE Std C37.42-2009.

1. Fusible element adopts the material of silver-copper alloy.Using precision technology and strict testing to guarantee accurate characteristics of time-current.
2. Fusible element be crimping to fasten cable wire,and fixed by high strength strain wire.That guarantee excellent mechanical strength.It will not be affected,even if under external factors such as vibration and high current impact.
3. The Arc extinguishing tube has excellent performance of arc extinguishing when low current overload fault.
4. We also supply Type K and Type T twin pigtails fuse link, The twin pigtails fuse link is convenient and easier to install in the fuse cutout than conventional single pigtail fuse links. The twin pigtails attach under the attachment stud on each side separately.

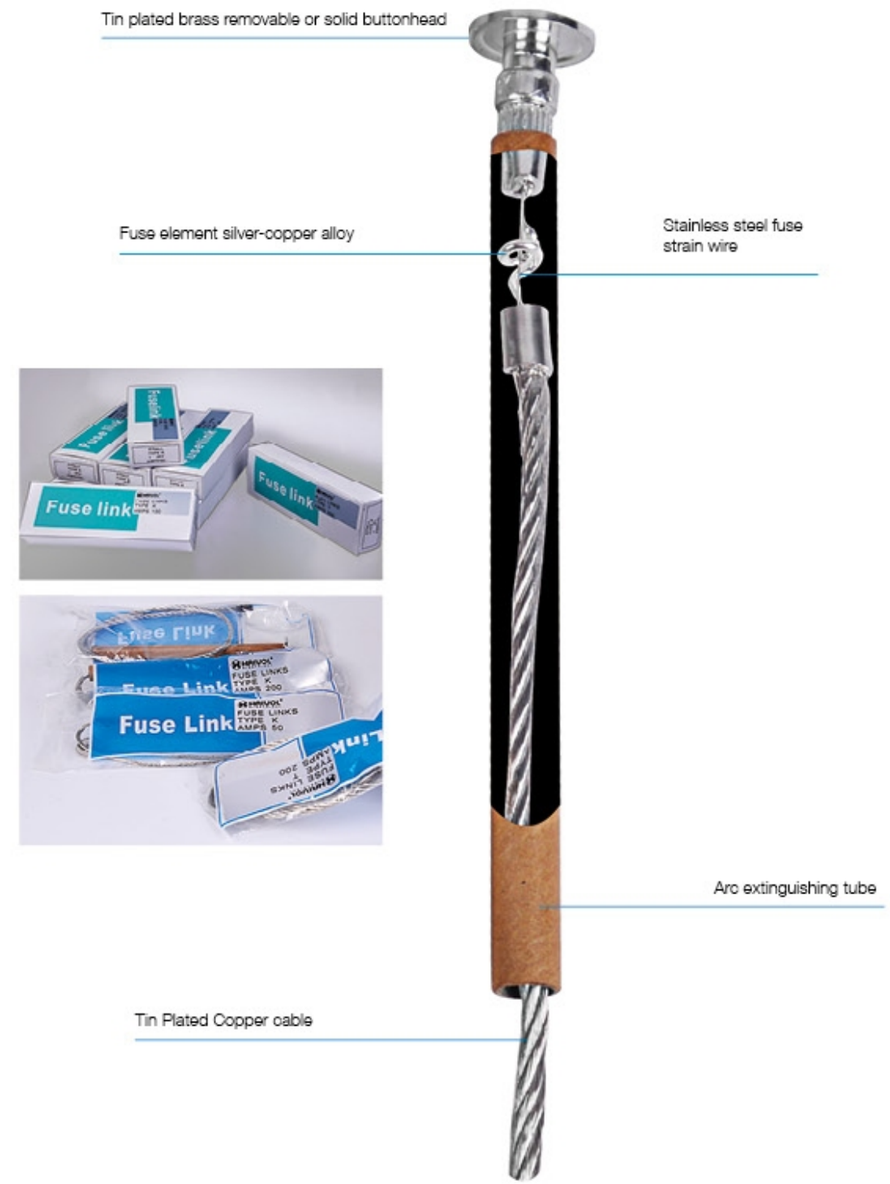

Type K Fuse Links

Amps	Diameter of buttonhead mm	Size of arc extinguishing tube mm
1Amp	ϕ12.70	ϕ8.0*130
2Amp		
3Amp		
6Amp		
8Amp		
10Amp		
12Amp		
16Amp		
20Amp		
25Amp		
30Amp		
40Amp		
50Amp	ϕ19.00	ϕ10.0*130
65Amp		
80Amp		
100Amp		
120Amp		
140Amp		
200Amp		

11-15kv Fuse link length 21'(533mm)
24-27kv Fuse link length 23'(584mm)
33-38kv Fuse link length 31'(787mm)

Type T Fuse Links

Amps	Diameter of buttonhead mm	Size of arc extinguishing tube mm
1Amp	ϕ12.70	ϕ8.0*130
2Amp		
3Amp		
6Amp		
8Amp		
10Amp		
12Amp		
16Amp		
20Amp		
25Amp		
30Amp		
40Amp		
50Amp	ϕ19.00	ϕ10.0*130
65Amp		
80Amp		
100Amp		
120Amp		
140Amp		
200Amp		

11-15kv Fuse link length 21'(533mm)
24-27kv Fuse link length 23'(584mm)
33-38kv Fuse link length 31'(787mm)

Type H Fuse Links

Amps	Diameter of buttonhead mm	Size of arc extinguishing tube mm
1Amp	ϕ12.70	ϕ8.0*130
2Amp		
3Amp		
6Amp		
8Amp		
10Amp		
12Amp		
16Amp		
20Amp		
25Amp		
30Amp		
40Amp		
50Amp	ϕ19.00	ϕ10.0*130
65Amp		
80Amp		
100Amp		
120Amp		
140Amp		
200Amp		

11-15kv Fuse link length 21'(533mm)
24-27kv Fuse link length 23'(584mm)
33-38kv Fuse link length 31'(787mm)

Type Slofast Fuse Links

Amps	Diameter of buttonhead mm	Size of arc extinguishing tube mm
0.4Amp	ϕ12.50	ϕ8.0*130
0.6Amp		
0.7Amp		
1.0Amp		
1.3Amp		
1.4Amp		
1.6Amp		
2.1Amp		
3.1Amp		
3.5Amp		
4.2Amp		
5.2Amp		
6.3Amp		
7.0Amp		
7.8Amp		
10.4Amp		
14Amp		
21Amp		
32Amp		
46Amp	ϕ19.00	ϕ10.0*130

11kv Fuse link leght 21'(533mm)
27kv Fuse link leght 23'(584mm)
33kv Fuse link leght 31'(787mm)

Type K Fuse Link Selection For Using Of Distribution Transformer Protection

The corresponding fuse is selected according to the time-current characteristics of the transformer, usually according to the rated current of the transformer.

Rated capacity of transformer（KVA）	full load current of transformer（A）	rated current of fuse links（A）		
		Minimum	maximum	recommendatory
10	0.58	1.15	1.73	1
20	1.15	2.31	3.46	3
50	2.89	5.77	8.66	6
63	3.64	7.27	10.91	8
80	4.62	9.24	13.86	10
100	5.77	11.55	17.32	12
125	7.22	14.43	21.65	15
160	9.24	13.86	18.48	15
200	11.55	17.32	23.09	20
250	14.4	21.35	28	25
315	18.19	27.28	36.37	30
400	23.09	34.64	46.19	40
500	28.87	43.30	57.74	50
630	36.37	54.56	72.75	65
800	46.19	69.28	92.38	80
1000	57.74	86.60	115.47	100
1250	72.17	108.25	144.34	140
1600	92.38	138.56	184.75	140
2000	115.47	173.21	230.94	200

NOTE: Rated capacity of transformer ≤160kVA,the rated current of the selected fuse links should be 2-3 times of the full load current of the transformer, Rated capacity of transformer ≥160kVA,the rated current of the selected fuse links should be 1.5-2 times of the full load current of the transformer.

HIGH VOLTAGE CURRENT-LIMITING FUSE

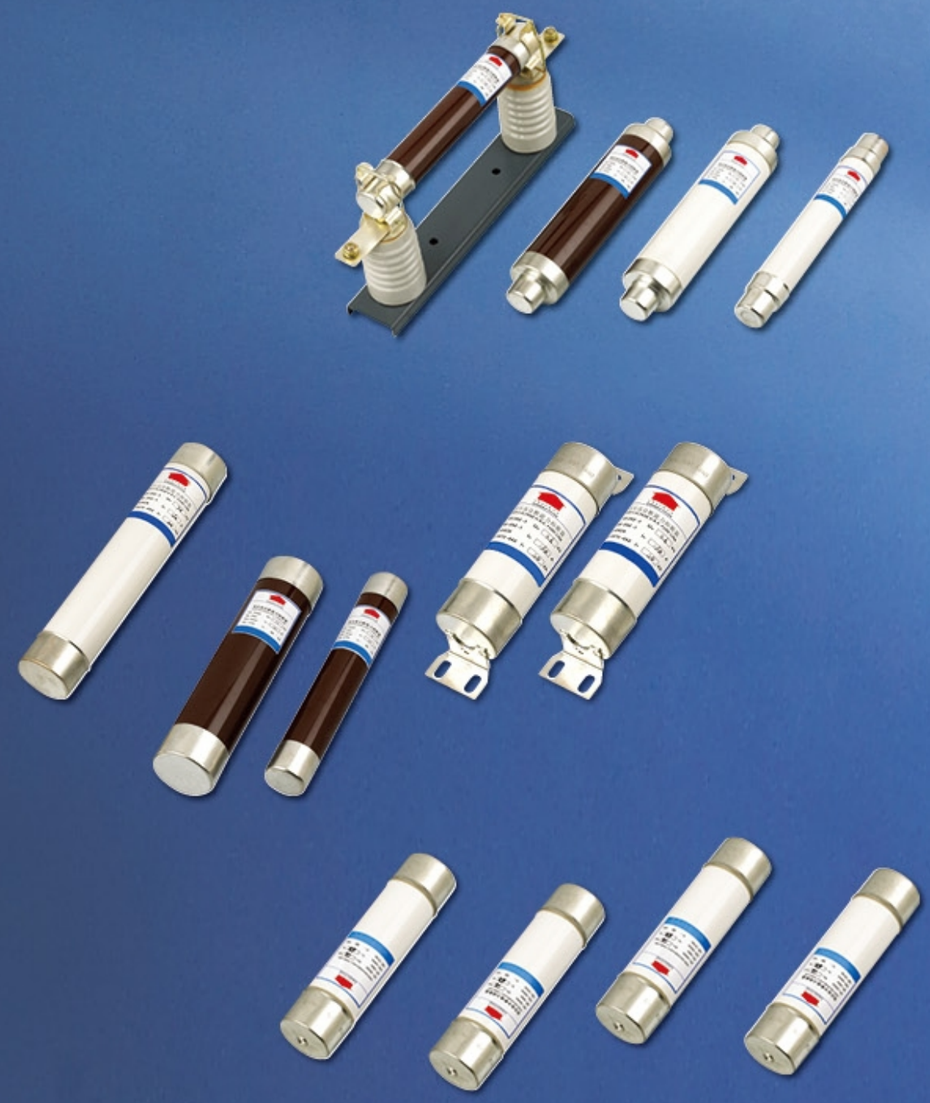

High voltage current-limiting fuse

For Full Range&Transformer Protection

Characteristic Brief

1.Rated voltage from 7.2KV to 40.5KV
2.Wide range of rated current from 6.3A to 200A
3.Full range performance options available at 12KV and 24KV
4.Powerful pyrotechnic or spring striker
5.H.R.C.
6.Current-limiting
7.Low power dissipation,low temperature rise
8.Operation extremely quickly,high reliability
9.With primary coil of transformer in series
10.Isolating & protecting transformer
11.Conforming to standards: GB15166.2 DIN43625 BS2692-1 IEC60282-1

Model Illustration

12 S D L A J 16

- 16: Rated current (A)
- J: J:Ferrule to DIN 43625
- A: N:None striker / A:With Striker
- L: Fuse link length:L=292mm; M=422mm; Q=537mm
- D: Fuse link diameter:D=ϕ51mm; F,I,K=ϕ76mm; X=ϕ88mm
- S: S:DIN Range / F:Full Range
- 12: Rated voltage (KV)

XRNT □ Selection Table

Model	Rated voltage Un(KV)	Rated current I n(A)	Diameter Length ϕDT × LT(mm)	Breaking capacity I 1(KA)
XRNT □	7.2 10 12	6.3	ϕ51 × 292	63
		10		
		16		
		20		
		25		
		31.5		
		40		
		50	ϕ76 × 292	
		63		
		80		
		100		
		125		
		160	ϕ88 × 292	50
		200		
	17.5 24	6.3	ϕ51 × 442	63
		10		
		16		
		20		
		25		
		31.5		
		40		
		50	ϕ76 × 442	
		63		
		80		
		100		
		125		
		160	ϕ88 × 442	
		200		
	36 40.5	6.3	ϕ51 × 537	40
		10		
		16		
		20		
		25		
		31.5		
		40		
		50	ϕ76 × 537	
		63		

XRNT □ External&Installation Dimensions

Unit:mm

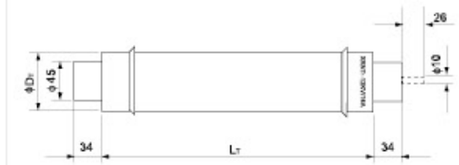

XRNT □ Fuse link

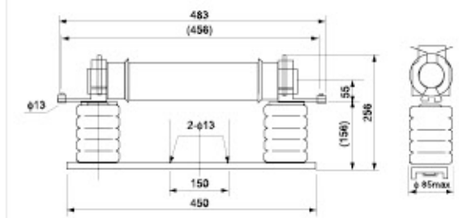

XRNT □ -12KV/ □ Fuse base

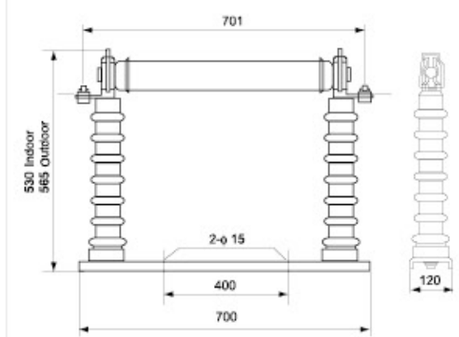

XRNT □ -40.5KV/ □ Fuse base

High voltage current-limiting fuse

For Motor Protection

Characteristic Brief

1.Rated voltage from 3.6KV to 12KV
2.Wide range of rated current from 31.5A to 400A
3.BS type and DIN type are all available
4.Powerful pyrotechnic or spring striker
5.H.R.C.
6.Current-limiting
7.Low power dissipation, low temperature rise
8.Operation extremely quickly, high reliability
9.With motor circuit in series
10.Isolating & protecting motor
11.Conforming to standards: GB15166.2 DIN43625 BS2692-1 IEC60282-1

Model Illustration

7.2 W F N H O 25

- 25: Rated current (A)
- O: Tags to BS2692-1
- H or M: Striker to BS2692-1
- N: Fuse link length: F=254mm; N=403mm; I=565mm
- F: Fuse link diameter: D= ϕ 51mm; F,I,K= ϕ 76mm;
- W: V or W: Fuse for use in motor circuits
- 7.2: Rated voltage (KV)

XRNM □ Selection Table

Model	Rated voltage Un(KV)	Rated current I n(A)	Diameter Length ϕ DT × LT(mm)	Breaking capacity I 1(KA)
XRNM □	3.6	50	ϕ 51 × 254	63
		63		
		80		
		100		
		125		
		160	ϕ 76 × 254	
		200		
		224		50
		250		
		315		
		355		
		400		
	7.2	25	ϕ 76 × 403	63
		31.5		
		40		
		50		
		63		
		80		
		100		
		125		
		160		50
		200		
		224		
		250		
		315		
	12	25	ϕ 76 × 568	63
		31.5		
		40		
		50		
		63		
		80		
		100		
		125		
		160		50
		200		
		225		

Din type XRNM2 series fuse base table

Model	Main dimensions			
	A_{DM}	B_{DM}	C_{DM}	D_{DM}
XRNM-3.6	337(340)	254(312)	305(80)	52
				76
XRNM-7.2	486(500)	403(461)	454(150)	76

XRNT □ External&Installation Dimensions

Unit:mm

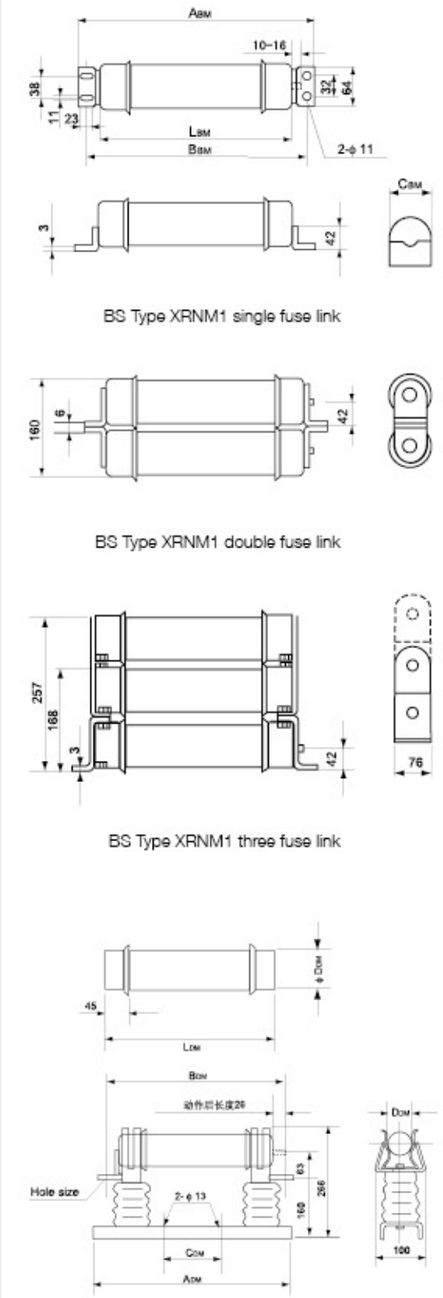

High voltage current-limiting fuse

For Use In Oil Switchgear

Characteristic Brief

1.Rated voltage from 3.6KV to 12KV
2.Wide range of rated current from 6.3A to 250A
3.Powerful pyrotechnic striker
4.Unique tripe seal
5.H.R.C.
6.Current-limiting
7.Low power dissipation, low temperature rise
8.Operation extremely quickly, high reliability
9.Mainly used for back-up protection in transformers of American type
10.Conforming to standards: GB15166.2 BS2692-1 / IEC60282-1

Model Illustration

12 O E F M A 63

- 63: Rated current (A)
- A: No Tags
- M: H or M: Striker to BS2692-1
- F: Fuse link length: F=254mm; G=359mm
- E: Fuse link diameter: E,H,L= ϕ 63mm
- O: Fuse sealed for use in oil switchgear
- 12: Rated voltage (KV)

XRNO1 Series Selection Table

Model	Rated voltage Un(KV)	Rated current I n(A)	Diameter Length ϕ DO × LO (mm))	Breaking capacity I 1(KA)
XRNO1	3.6	6.3	ϕ 63 × 254	50
		10		
		16		
		20		
		25		
		31.5		
		40		
		50		
		63		
		80		
		100		
		125		
		160		
		200		
		250		
	7.2	80	ϕ 63 × 359	45
		100		
		112		
		100		
		125		
		140		
		160		
	12	6.3		40
		10		
		16		
		20		
		25		
		31.5		
		40		
		50		
		63		
		71		
		80		
		90		
		100		
		125		

XRNO1 External Dimensions

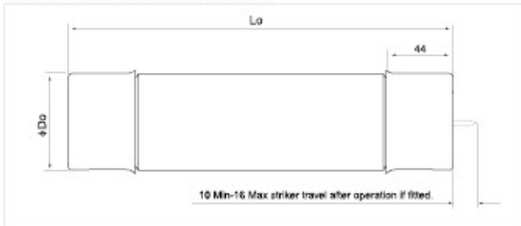

BS&DIN Type H.V. Fuse Link Cross Section Compared

Unit:mm

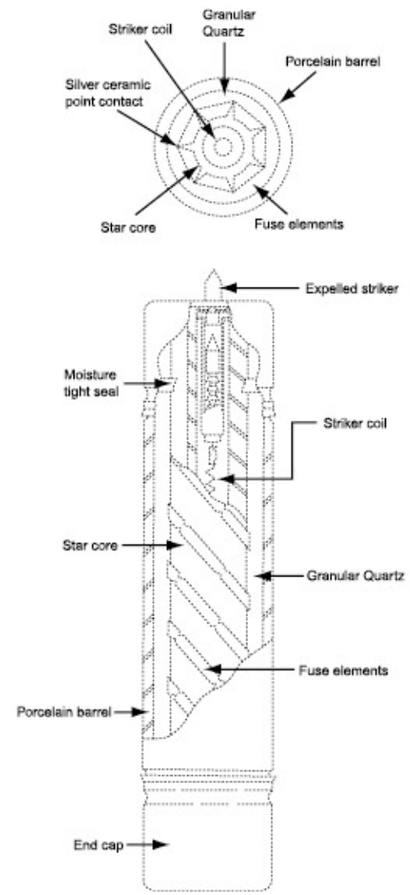

BS Type H.V. Fuse Link Cross Section

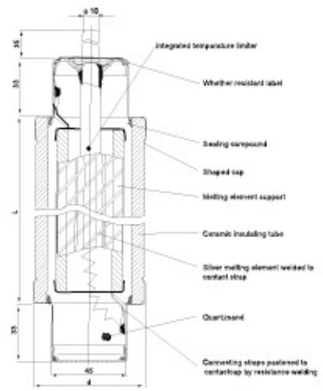

RN Series H.V. Fuse Link Cross Section

SURGE ARRESTER SERIES

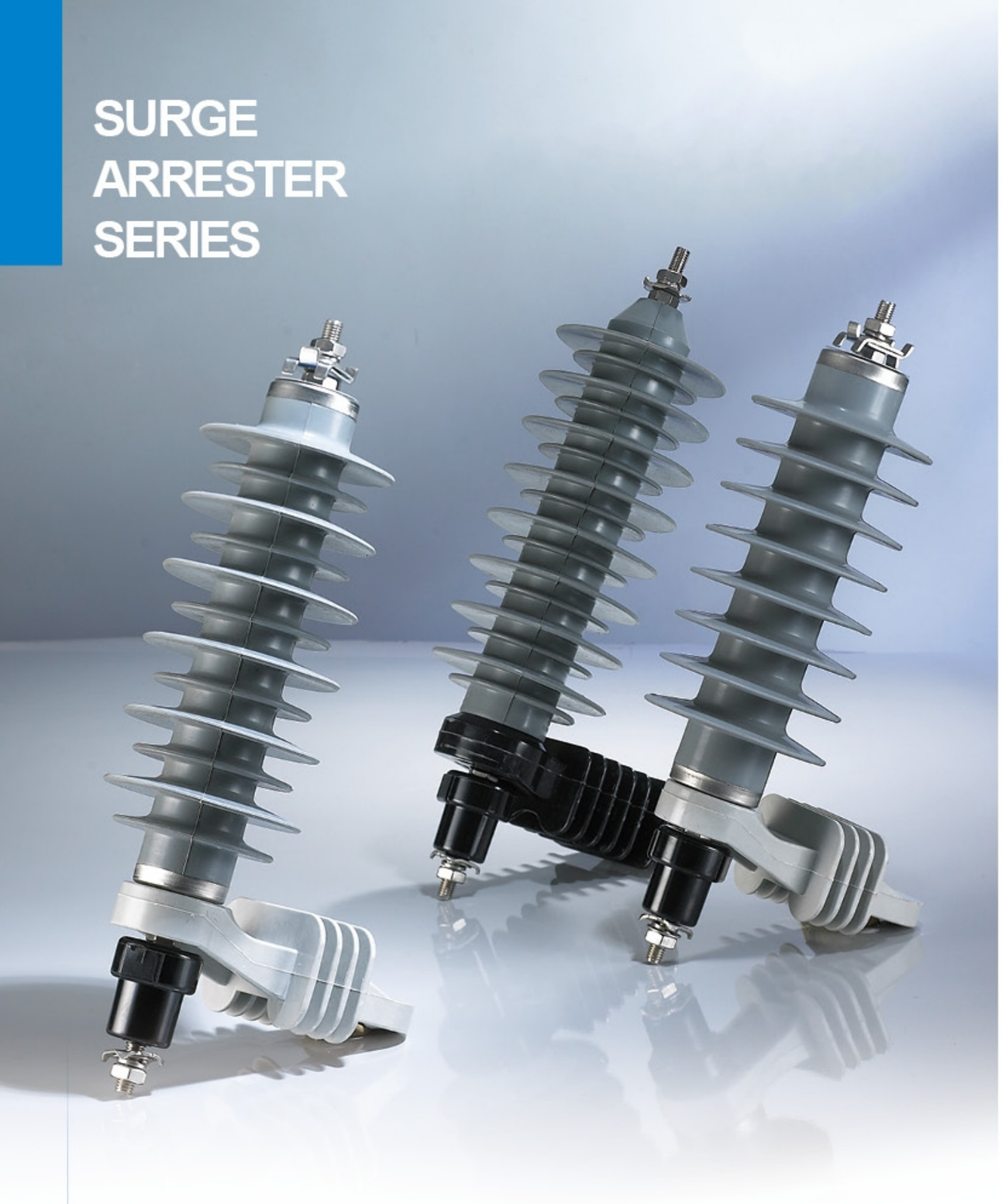

Surge Arrester Series

General

1. Ratings:0.22~500KV (porcelain),0.22~220KV(composite)
2. Application:for protection of power transmission & distribution system from over-voltage.
3. Features:

- □ Silicone polymer housing composite metal oxide surge arrester and porcelain housing metal Oxide surge arresters are available.
- □ Easy installation and maintenance.
- □ Good sealing capability to ensure reliable operation.
- □ Protection and reliability of the surge arrester have been greatly enhanced.

Type Designation

YH 10 w -12

- Rated voltage (KV)
- W:Gapless
- Nominal discharge current(KA)
- YH-Silicone polymer housing metal oxide surge arrester
- Y-Porcelain housing metal oxide surge arrester

Working Condition

1. Ambient air temperature:-40℃ ~+40℃ ;
2. Altitude: <=2000m;
3. Frequency: 48Hz~62Hz;
4. Power frequency voltage applied between terminals of surge arrester must not exceed continuous operating voltage of surge arrerter;
5. Earthquake intensity is less than 8 degree;
6. Max. Wind speed is 35m/s.

Main Techical Parameter

1. Metal oxide Polymer Housing (Gapless) type Surge Arrester for A.C System(5kA series)

Model	Rated voltage ($KV_{r.m.s}$)	Continuous operating Voltage($KV_{r.m.s}$)	Lightening impulse residual voltage under nominal discharge current (<=KV_p)	Line discharge class	Creepage distance(mm)	2ms square wave impulse current withstands(A)	4/10 μ high current impulse Withstands(KA_p)
YH-5W-6	6	5.1	18		320	150	65
YH-5W-9	9	7.65	27		430	150	65
YH-5W-12	12	10.2	36		430	150	65
YH-5W-15	15	12.75	45		530	150	65
YH-5W-18	18	15.3	54		530	150	65
YH-5W-21	21	16.8	63		640	150	65

Surge Arrester

Model	Rated voltage ($KV_{r.m.s}$)	Continuous operating Voltage($KV_{c.m.s}$)	Lightening impulse residual voltage under nominal discharge current (<=KV_p)	Line discharge class	Creepage distance(mm)	2ms square wave impulse current withstands(A)	4/10 μ high current impulse Withstands(KA_p)
YH-5W-24	24	19.2	72		640	150	65
YH-5W-27	27	21.6	81		740	150	65
YH-5W-30	30	24	90		890	150	65
YH-5W-33	33	26.4	99		890	150	65
YH-5W-36	36	28.8	108		1115	150	65

2. Metal Oxide Polymer Housing (Gapless) type Surge Arrester for A.C. System (10KA series)

Model	Rated voltage ($KV_{r.m.s}$)	Continuous operating Voltage($KV_{c.m.s}$)	Lightening impulse residual voltage under nominal discharge current (<=KV_p)	Line discharge class	Creepage distance(mm)	2ms square wave impulse current withstands(A)	4/10 μ high current impulse Withstands(KA_p)
YH-10W-6	6	5.1	18	1	320	250	100
YH-10W-9	9	7.65	27	1	430	250	100
YH-10W-12	12	10.2	36	1	430	250	100
YH-10W-15	15	12.75	45	1	530	250	100
YH-10W-18	18	15.3	54	1	530	250	100
YH-10W-21	21	16.8	63	1	640	250	100
YH-10W-24	24	19.2	72	1	740	250	100
YH-10W-27	27	21.6	81	1	740	250	100
YH-10W-30	30	24	90	1	890	250	100
YH-10W-33	33	26.4	99	1	890	250	100
YH-10W-36	36	28.8	108	1	1115	250	100
YH-10W-42	42	33.6	126	2	1260	400	100
YH-10W-48	48	39	139	2	1260	400	100
YH-10W-54	54	42	160	2	1260	400	100
YH-10W-60	60	48	178	2	1465	400	100
YH-10W-66	66	52.8	196	2	1465	400	100
YH-10W-72	72	57	214	2	2255	400	100
YH-10W-84	84	67.2	244	2	2255	400	100
YH-10W-90	90	72.5	249	2	2255	400	100
YH-10W-96	96	75	265	3	3555	800	100
YH-10W-108	108	84	281	3	3555	800	100
YH-10W-120	120	96	300	3	4153	800	100
YH-10W-150	150	120	416	3	5040	800	100
YH-10W-200	200	156	520	3	7110	800	100

3. Metal Oxide Polymer Housing (Gapless) type Surge Arrester for A.C. System (20KA series)

Model	Rated voltage ($KV_{r.m.s}$)	Continuous operating Voltage($KV_{c.m.s}$)	Lightening impulse residual voltage under nominal discharge current (<=KV_p)	Line discharge class	Creepage distance(mm)	2ms square wave impulse current withstands(A)	4/10 μ high current impulse Withstands(KA_p)
YH-20W-108	108	84	281	3	3555	800	100
YH-20W-120	120	96	300	3	4153	800	100
YH-20W-150	150	120	416	3	5040	800	100
YH-20W-200	200	156	520	3	7110	800	100

4. Metal Oxide Porcelain Housing (Gapless) type Surge Arrester for A.C. System (5KA series)

Model	Rated voltage ($KV_{r.m.s}$)	Continuous operating Voltage($KV_{c.m.s}$)	Lightening impulse residual voltage under nominal discharge current (<=KV_p)	Line discharge class	Creepage distance(mm)	2ms square wave impulse current withstands(A)	4/10 μ high current impulse Withstands(KA_p)
Y5W-6	6	5.1	18		280	150	65
Y5W-9	9	7.65	27		320	150	65
Y5W-12	12	10.2	36		320	150	65
Y5W-15	15	12.75	45		450	150	65
Y5W-18	18	15.3	54		450	150	65
Y5W-21	21	16.8	63		450	150	65
Y5W-24	24	19.2	72		510	150	65
Y5W-27	27	21.6	81		510	150	65
Y5W-30	30	24	90		890	150	65
Y5W-33	33	26.4	99		890	150	65
Y5W-36	36	28.8	108		890	150	65

5 Metal Oxide Polymer Housing (Gapless) type Surge Arrester for A.C. System (10KA series)

Model	Rated voltage ($KV_{r.m.s}$)	Continuous operating Voltage($KV_{c.m.s}$)	Lightening impulse residual voltage under nominal discharge current (<=KV_p)	Line discharge class	Creepage distance(mm)	2ms square wave impulse current withstands(A)	4/10 μ high current impulse Withstands(KA_p)
Y10W-6	6	5.1	18	1	280	250	100
Y10W-9	9	7.65	27	1	320	250	100

Surge Arrester

Y10W-12	12	10.2	36	1	320	250	100
Y10W-15	15	12.75	45	1	450	250	100
Y10W-18	18	15.3	54	1	450	250	100
Y10W-21	21	16.8	63	1	450	250	100
Y10W-24	24	19.2	72	1	510	250	100
Y10W-27	27	21.6	81	1	510	250	100
Y10W-30	30	24	90	1	890	250	100
Y10W-33	33	26.4	99	1	890	250	100
Y10W-36	36	28.8	108	1	890	250	100
Y10W-42	42	33.6	126	2	1256	400	100
Y10W-48	48	39	139	2	1256	400	100
Y10W-54	54	42	160	2	1256	400	100
Y10W-60	60	48	178	2	1440	400	100
Y10W-66	66	52.8	196	2	1440	400	100
Y10W-72	72	57	214	2	1440	400	100
Y10W-84	84	67.2	244	2	2200	400	100
Y10W-90	90	72.5	249	2	2200	400	100
Y10W-96	96	75	265	3	3350	800	100
Y10W-108	108	84	281	3	3350	800	100
Y10W-120	120	96	300	3	3948	800	100
Y10W-150	150	120	416	3	4400	800	100
Y10W-200	200	156	520	3	6700	800	100

6. Metal Oxide Polymer Housing (Gapless) type Surge Arrester for A.C. System (20KA series)

Model	Rated voltage ($kV_{r.m.s}$)	Continuous operating Voltage($KV_{c.m.s}$)	Lightening impulse residual voltage under nominal discharge current (<=KV_p)	Line discharge class	Creepage distance(mm)	2ms square wave impulse current withstands(A)	4/10 μ high current impulse Withstands(KA_p)
Y20W-108	108	84	281	3	3555	800	100
Y20W-120	120	96	300	3	4106	800	100
Y20W-150	150	120	416	3	4400	800	100
Y20W-200	200	156	520	3	6700	800	100
Y20W-444	444	324	1106	4	17052	2000	100

WARM TIPS

When order,please indicate the detailed information as below listed:

1. Max. System voltage;
2. Rated voltage or Max.continuous operating voltage;
3. Nominal discharge current;
4. Type of housing material
5. Anti-contamination degree and creepage distance;
6. Any special requirement;
7. Accessories.

COMPOSITE INSULATOR SERIES

Composite Long Rod Insulator

General

1. Ratings:12~500kV.
2. Application: for lines supporting and insulation of power transmission & distribution system.

Type Designation

CS □ XZ - □ / □

- Greepage distance, mm
- Lighting impulse withstand voltage,KV
- Coupling code
- SML,KN
- Composite insulator

Working Condition

1. Ambient air temperature:-50℃ ~+50℃
2. Altitude:<=3000m
3. Frequency:<=100Hz

Main Technical Parameter

Model	Specified Mechanical load(KN)	Spacing H (mm)	Arcing distance (>mm))	Minimum Creepage distance	Lightning impulse Withstand voltage (>=KV_p)	Wet power frequency withstand voltage (>=$KV_{r.m.s.}$)	Factory model
CS70XZ-100/465	70	360	215	480	100	50	FXBW-15/70
CS120XZ-100/465	120	400	215	480	100	50	FXBW-15/120
CS70XZ-120/450	70	413	275	544	120	60	FXBW-17.5/70
CS120XZ-120/450	120	513	275	544	120	60	FXBW-17.5/120
CS70XZ-125/480	70	461	320	550	125	70	FXBW-24/70(20mm/KV)
CS120XZ-125/480	120	490	320	550	125	70	FXBW-24/120(20mm/KV)
CS70XZ-145/745	70	500	355	750	145	80	FXBW-24/70(31mm/KV)
CS120XZ-145/745	120	529	355	750	145	80	FXBW-24/120(31mm/KV)
CS70XZ-185/900	70	541	400	900	185	95	FXBW-36/70
CS120XZ-185/900	120	570	400	900	185	95	FXBW-36/70
CS70XZ-230/1120	70	610	455	1250	230	105	FXBW-36/70(31mm/KV)
CS120XZ-230/1120	120	650	455	1250	230	105	FXBW-36/120(31mm/KV)
CS70XZ-325/1815	70	860	710	2210	325	150	FXBW-72.5/70
CS120XZ-325/1815	120	900	710	2210	325	150	FXBW-72.5/120

CS70XZ-550/3150	70	1220	1055	3400	550	230	FXBW-126/70
CS120XZ-550/3150	120	1255	1055	3400	550	230	FXBW-126/120
CS120XZ-650/3625	120	1475	1270	4100	650	275	FXBW-145/70
CS210XZ-650/3625	160	1654	1485	4495	650	250	FXBW-145/160
CS120XZ-1050/6300	210	2550	2300	8500	1050	460	FXBW-245/210
CS160XZ-1050/6300	160	2430	2200	7000	1050	400	FXBW-252/160
CS120XZ-1425/9075	120	3180	2780	9880	1425	570	FXBW-363/120
CS210XZ-1425/9075	210	3440	3000	10450	1425	570	FXBW-363/210
CS120XZ-2250/13750	120	4450	4050	14100	2250	740	FXBW-550/120
CS210XZ-2250/13750	210	4450	4050	13850	2250	740	FXBW-550/210

Composite Pin Insulator

General

1. Ratings: up to 36KV.
2. Application: for lines supporting, suspending of power transmission & distribution system.
3. Standard : IEC 61952: 2008, ANSI, etc.

Type Designation

FPW- □ / □

- Specified mechanical load (KN)
- Rated voltage （kV）
- Composite pin insulator

Working Condition

1. Ambient air temperature:-50℃ ~+50℃
2. Altitude:<=3000m
3. Frequency:<=100Hz

Main Technical Parameter

Model	Rated voltage (KV)	Specified mechanical load(kN)	Spacing H (mm))	Arcing distance (>mm)	Minimum creepage distance (>=mm)	Lightening impulse residual voltage under nominal discharge current (<=KV_p)	Wet power frequency Withstand voltage(>=$KV_{r.m.s.}$)
FPW-12/5	12	5	248	195	315	100	45
	120	5	228	195	315	100	45
FPW-15/5	15	5	268	215	450	120	50
	15	5	248	215	450	120	50
FPW-24/8	24	5	308	250	480	150	60
	24	5	288	250	480	150	60
FPW-36/5	36	5	413	340	900	180	80
	36	5	393	340	900	180	80

Composite Post Insulator

General

1.Ratings : up to 252kV.
2.Application : for lines supporting and insulation of power transmission & distribution system.
3.Standard: IEC 62217:2005,IEC 62231:2006,ANSI,etc.

Type Designation

FZSW - □ / □

- Specified mechanical load (kN)
- Rated voltage (kV)
- Composite post insulator

Working Condition

1.Ambient air temperature: -50℃ ~+50℃
3.Altitude : <=3000m
3.Frequency:<=100Hz

Main Technical Parameter

Model	Rated voltage (KV)	Specified mechanical load(kN)	Spacing H (mm)	Arcing distance (>mm)	Minimum creepage distance (>=mm)	Lightening impulse residual voltage under nominal discharge current (<=KV_p)	Wet power frequency Withstand voltage(>=$kV_{r.m.s}$)
FZSW-12/6	12	6	215	210	460	100	45
FZSW-24/8	24	8	305	265	780	130	60
FZSW-36/6	36	6	445	435	1015	190	90
FZSW-72.5/10	72.5	10	770	675	1820	350	150
FZSW-126/8	126	8	1220	1125	3150	500	230
FZSW-245/4	252	4	2300	2200	6300	1050	450

Composite Line Post Insulator

ezitown ELECTRIC SOLUTIONS

General

1.Ratings : up to 36kV.
2.Application : for lines suspending and insulation of power transmission & distribution system.
3.Standard: IEC 61109: 2008, IEC 61952: 2003,ANSI,etc.

Type Designation

FPS - □ / □

- Specified mechanical load (kN)
- Rated voltage (kV)
- Composite line post insulator

Working Condition

1. Ambient air temperature: -50℃ ~+50℃
2. Altitude : <=3000m
3. Frequency:<=100Hz

Main Technical parameter

Model	Rated voltage (KV)	Specified mechanical load(kN)	Spacing H (mm)	Arcing distance (>mm)	Minimum creepage distance (>=mm)	Lightening impulse residual voltage under nominal discharge current (<=KV_p)	Wet power frequency Withstand voltage(>=$kV_{r.m.s}$)
FPS-12/5	12	5	510	215	450	100	45
FPS-12/10	12	10	540	215	400	100	45
FPS-24/5	24	5	555	240	480	120	50
FPS-36/5	36	5	635	325	1015	180	75
FPS-36/10	36	10	675	350	1000	180	75

PORCELAIN INSULATOR SERIES

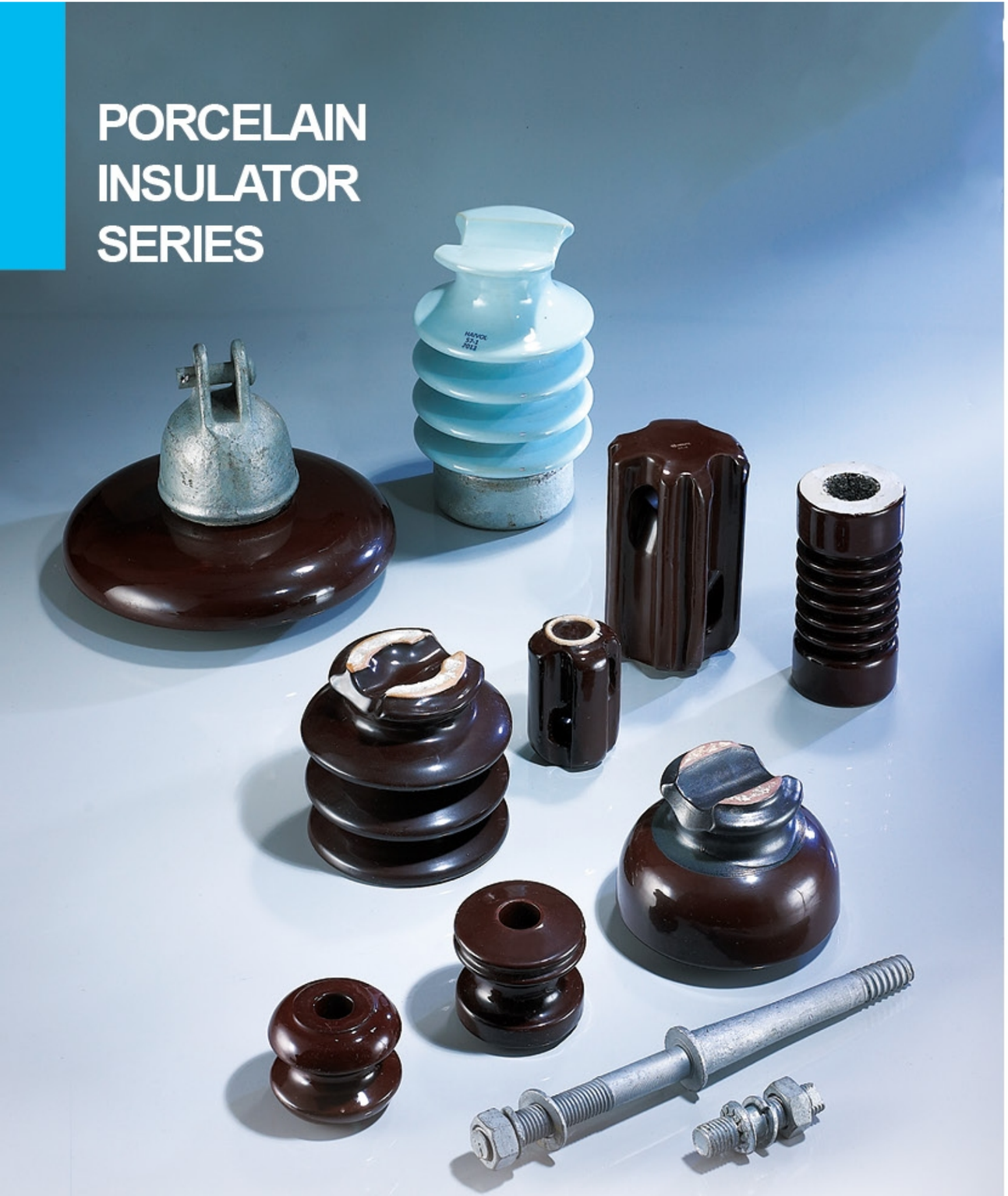

Pin Type Insulators (BS)Insulator

ezitown
ELECTRIC SOLUTIONS

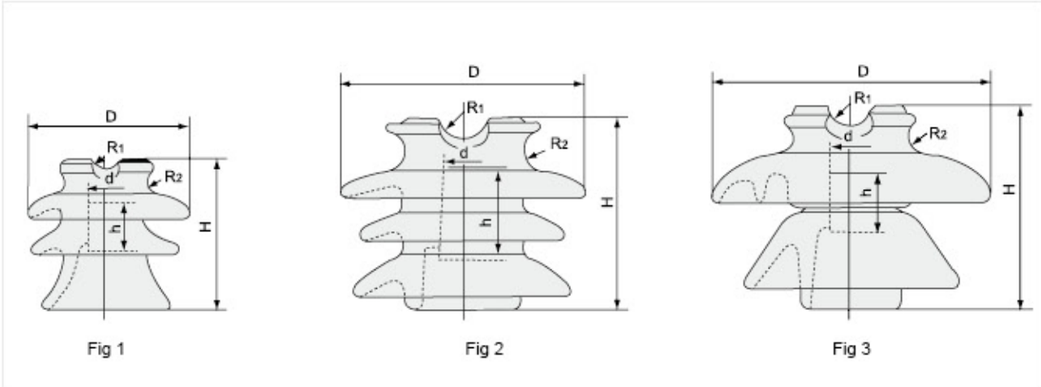

Fig 1 Fig 2 Fig 3

Main dimensions and standard particulars

Fig			1	1	2	3
Class BS			P-11-Y	P-15-Y	P-20-Y	P-33-Y
Main Dimensions (mm)	H		133	137	195	244
	h		48	48	52.63	52.63
	D		140	152	230	279
	d		18.29	18.29	27.78	27.78
	R_1		13	13	19	19
	R_2		9.5	12.7	14.3	13
Nominal Voltage (kV)			11	15	22	33
Creepage Distance (mm)			240	298	432	630
Minimum Flashover Voltage	Power-frequency	Dry (kV)	75	80	100	135
		Wet (kV)	45	55	60	85
	50% Impulse	Positive (kV)	100	130	160	185
		Negative (kV)	110	175	205	
Withstand Voltage	One minute power-frequency	Dry (kV)	65	70	90	110
		Wet (kV)	40	50	55	75
	mpulse (kV)			110	150	
Radio-Influence-Voltage Data	Test Voltage to Ground (kV)		15	15	22	30
	Maximum RIV at 1000kHz (uV)		8000	8000	12000	16000
Power-frequency puncture Voltage(kV)			135	135	145	185
Cantilever Failing Load(kN)			11	11	11	13
Weight (kg)			1.8	-	-	11.5

Pin Type Insulators (BS)

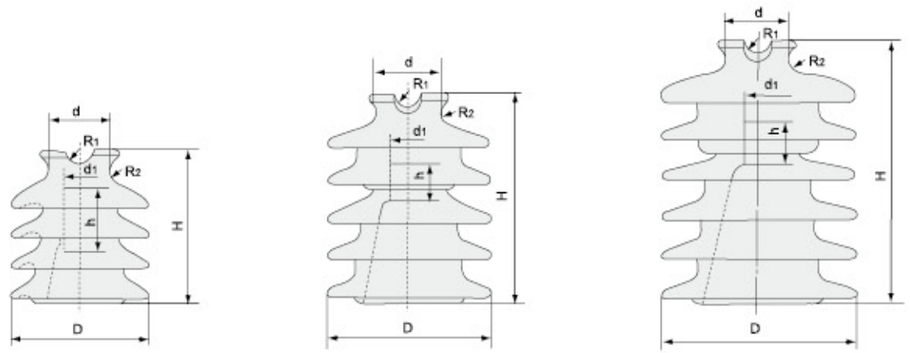

Fig 1 Fig 2 Fig 3

Main dimensions and standard particulars

Fig			1	2	3
Class BS			Pw-11-Y	Pw-22-Y	Pw-33-Y
Main Dimensions (mm)	H		185	255	320
	h		52.63	52.63	52.63
	D		170	205	240
	d		76	76	76
	d_1		27.78	27.78	27.78
	R_1		16	16	16
	R_2		16	16	16
Nominal Voltage (kV)			15	22	33
Creepage Distance (mm)			432	673	851
Power-frequency puncture voltage (kV)			150	200	210
Minimum Flashover Voltage	50% Impulse positive		150	190	210
	Power-frequency	Dry (kV)	100	125	140
		Wet (kV)	65	95	110
Withstand Voltage	One minute power-frequency	Dry (kV)	90	110	125
		Wet (kV)	60	90	100
	Impulse (kV)		140	180	200
Radio-Influence-Voltage Data	Test Voltage to Ground (kV)		22	30	44
	Maximum RIV at 1000kHz (uV)		12000	16000	25000
Cantilever Failing Load(kN)			11	11	11
Weight (kg)			5	10	13

Pin Type Insulators (ANSI)

ezitown ELECTRIC SOLUTIONS

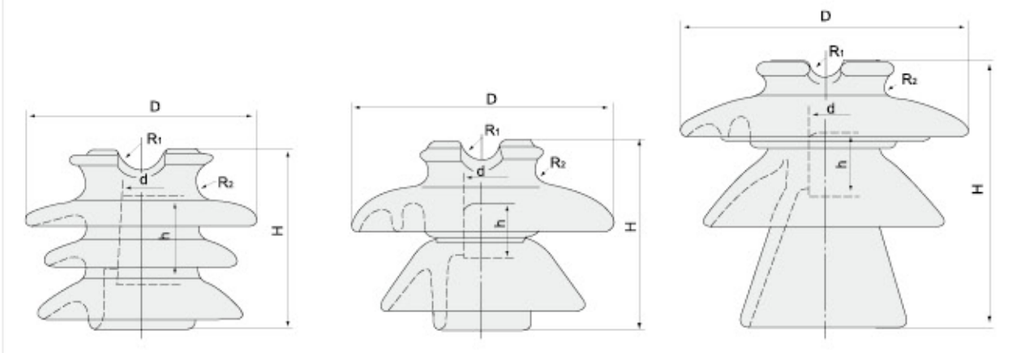

Fig 1 Fig 2 Fig 3

Main dimensions and standard particulars

Fig				1	1	2	2	3
Class ANSI				56-1	56-2	56-3	56-4	56-5
Main Dimensions (mm)	H			146	165	191	241	318
	h			50.8	50.8	50.8	50.8	63.5
	D			191	228	267	305	343
	d			34.9	34.9	34.9	34.9	34.9
	d1			19	19	19	19	19
	R2			14	14	14	14	14
Nominal Voltage (kV)				23	23	35	46	69
Creepage Distance (mm)				330	430	533	685	865
Minimum Flashover Voltage	Power-frequency	Dry (kV)		95	110	125	140	175
		Wet (kV)		60	70	80	95	125
	50% Impulse	Positive (kV)		150	175	200	225	270
		Negative (kV)		190	225	265	310	340
Radio-Influence-Voltage Data	Test Voltage to Ground (kV)			15	22	30	30	44
	Maximum RIV at 1000kHz (uV)			100	100	200	200	200
Low-frquency puncture puncture voltage average (kV)				130	145	165	186	225
Dry arcing dislance (mm)				178	210	241.3	285	356
Cantilever Failing Load (kN)				1134	1360	1360	1360	1360
Weight (kg)				3.7	5.3	7	10.8	13.5

Pin Type Insulators (ANSI)

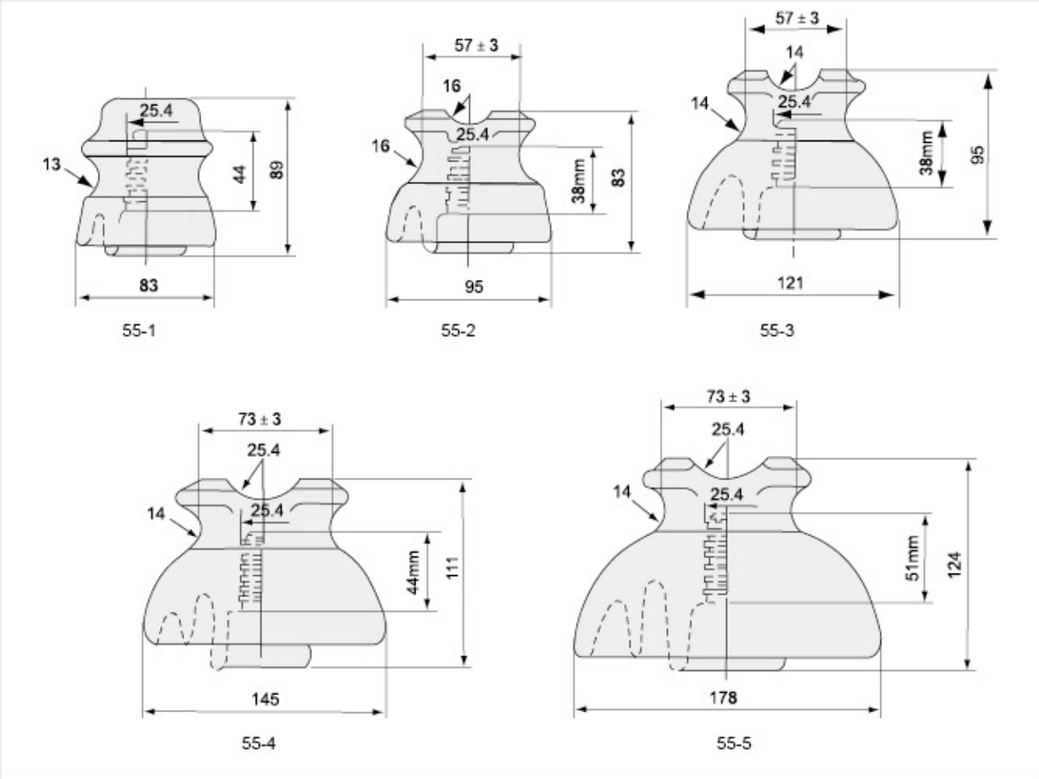

Main dimensions and standard particulars

Class ANSI	55-1	55-2	55-3	55-4	55-5
Creepage distance (mm)	102	127	178	229	305
Dry arcing distance (mm)	57	86	114	127	159
Cantilever strength (kN)	13	11	11	13	13
Low frequency dry flashover voltage (kV)	35	45	56	65	80
Low frequency wet flashover voltage (kV)	20	25	30	35	45
Critical impulse flashover, Pos (kV)	50	70	90	105	130
Critical impulse flashover, Neg (kV)	70	85	110	130	150
Power-frepuency puncture voltage (kV)	50	70	90	95	115
Test voltage to ground (kV)	5	5	10	10	15

Pin Type Insulators

ezitown
ELECTRIC SOLUTIONS

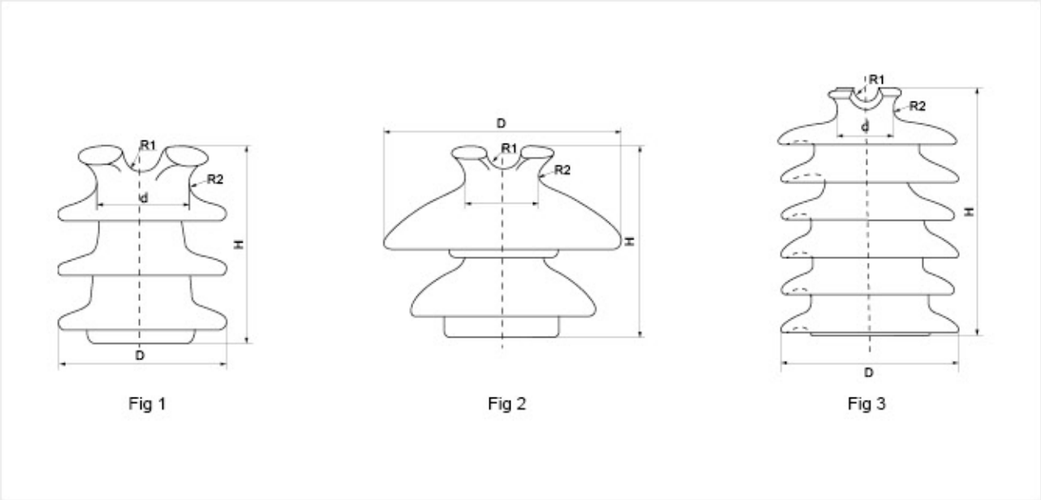

Main dimensions and standard particulars

Type			ALP11/275	FLP22/480	ALP33/920
Figure No.			1	2	3
Main Dimensions mm	H		152	200	320
	h				
	D		136	250	240
	d		76	82	86
	d1		34.9	34.9	34.9
	R1		16	16	16
	R2		16	16	16
Nominal voltage		KV	15	22	33
Creepage Distance		mm	430	490	920
50%Impulse Flashover Voltage		KV	150	160	210
One Minute Wet Withstand Voltage		KV	37	50	90
Power Frequency Puncture Voltage		KV	145	160	170
Cantilever Failing Load		KN	7	11	11
Net Weight		kg	5.5	4.2	14.3
Spindles Type			C/150/7	C/150/11	C/300/7
Applicable standard			AS		

Pin Type Insulators

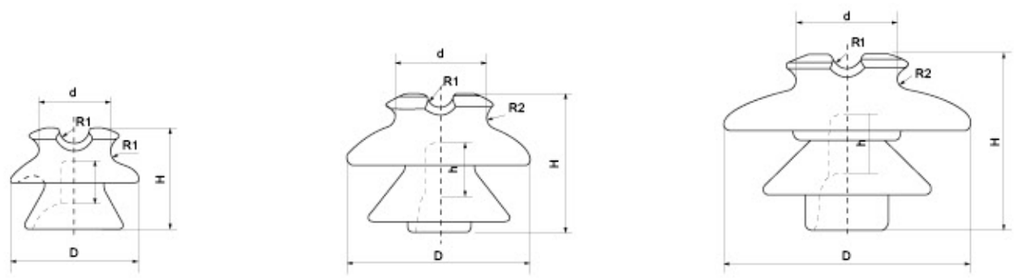

Fig 1 Fig 2 Fig 3

Main dimensions and standard particulars

Type				SLP11/180	SLP22/420	SLP33/634
Figure No.				1	2	3
Main Dimensions mm		H		107	168	194
		h		40	63.5	63.5
		D		140	228	279
		d		76	113	113
		R1		16	16	16
		R2		13	13	13
Nominal voltage			KV	11	22	33
Creepage Distance			mm	180	450	520
Power Frequency Puncture Voltage			KV	95	130	165
Cantilever Failing Load			KN	11	11	11
Minimum Flashover Voltage（min)	Power Frequency	Dry	KV	60	80	120
		Wet	KV	32	60	80
	50%Critical Impulse(peak)		KV	95	150	170
Net Weight			kg	1.3	4.6	8.9
Spindles Type				A/130/7	C/150/11	C/200/11
Applicable standard				AS		

Spindles(For Use With Pin Type Insulators) (BS)

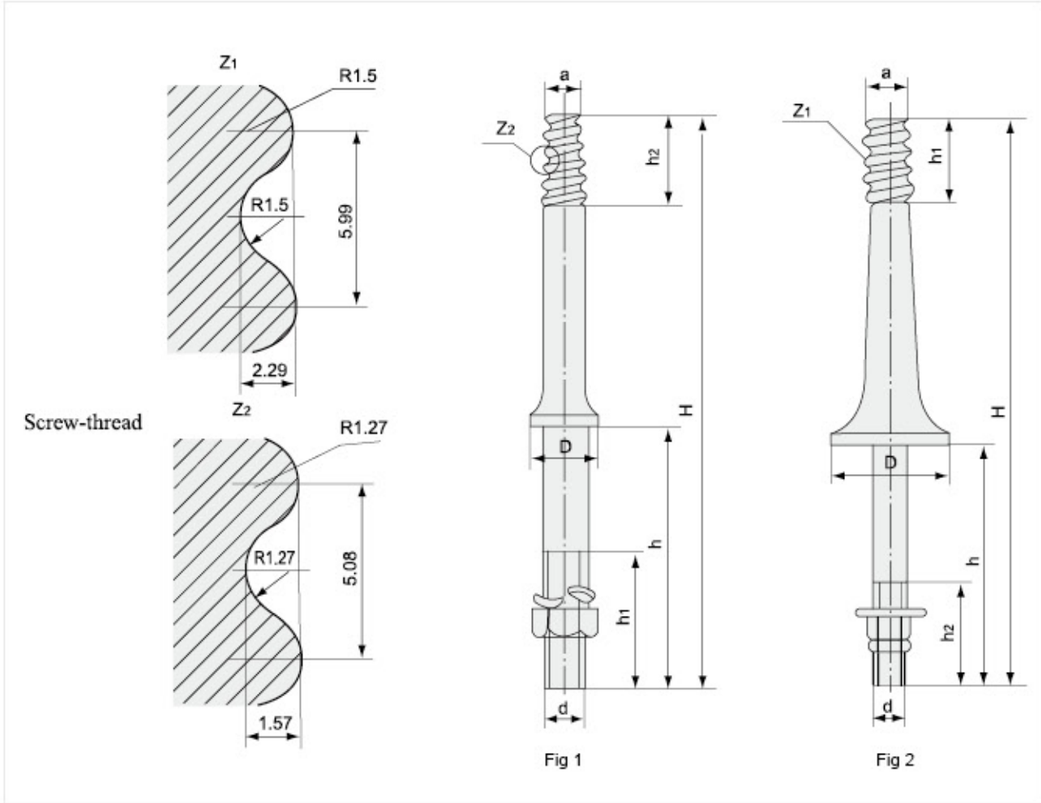

Fig 1 Fig 2

Main dimensions and standard particulars

Fig		1	1	1	2	2
Class BS						
Main Dimensions (mm)	H	305	352	215	261	369
	D	38	41	38	60	51
	h	140	127	60	46	140
	h_1	74	80	44	41	78
	h_2	44.45	44.45	44.45	47	47
	a	18.29	18.29	18.29	27.78	27.78
	d	20	22	20	22	22
Mechanical strength (kN)		5	5	5	10	10
Weight (kg)		1	1.2	0.75	1.5	2

Spindles(For Use With Pin Type Insulators) (ANSI)

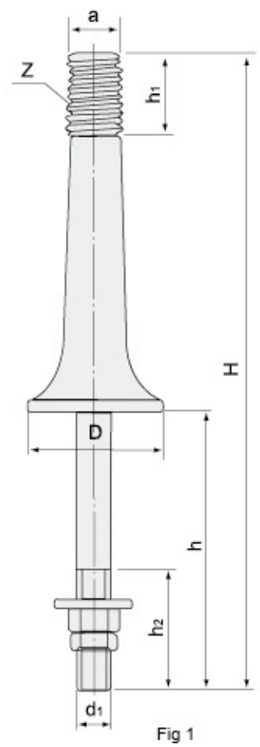

Fig 1

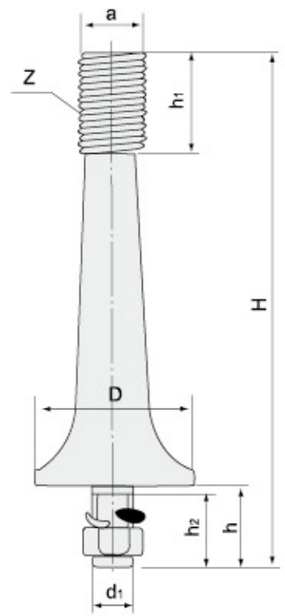

Fig 2

Main dimensions and standard particulars

Fig	Main dimensions (mm)							Mechanical strength (kn)	Class ANSI	Weight (kg)
	H	D	h	h1	h2	a	d1			
1	330	76	178	51	76	34.9	20	11	56-1	1.9
1	356	76	178	51	76	34.9	20	9	56-2	2.2
1	407	89	178	51	76	34.9	20	10	56-3	2.5
1	432	89	178	51	76	34.9	20	9	56-4	3.25
1	343	45	165	51	76	34.9	20	6	56-2	1.6
2	198	76	45	51	40	34.9	20	11	56-1	1.54
2	223	76	45	51	40	34.9	20	9	56-2	1.87
2	274	89	45	51	40	34.9	20	10	56-3	2.17
2	299	89	45	51	40	34.9	20	9	56-4	2.7
2	223	45	45	51	40	34.9	20	6	56-2	1.3
1	356	76	76	51	76	34.9	16	5	56-2	1.9

Suspension Type Insulators (ANSI)

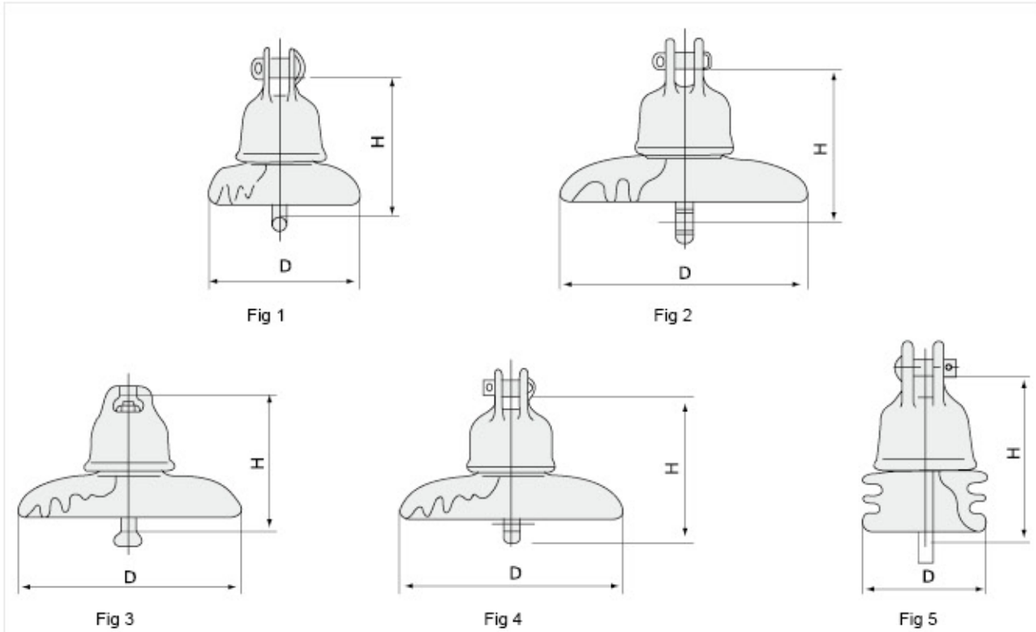

Main dimensions and standard particulars

Fig			1	2	3	4	3	4	5	4
Class ANSI			52-1	52-2	52-3	52-4	52-5	52-6	52-9	52-10
Main Dimensions (mm)	D		165	190.5	254	254	254	254	114	279.4
	H		139.7	146	146	146	146	146	160	165
Creepage disance (mm)			178	210	292	292	279	279	171	279
Power-frequency puncture voltage (kV)			80	90	110	110	110	110	80	110
Average Flashover Voltage	Power-frequency	Dry (kV)	60	65	80	80	80	80	60	80
		Wet (kV)	30	35	50	50	50	50	30	50
	Critical-impulse 15x40 μ s wave	Positive (kV)	100	115	125	125	125	125	90	125
		Negative (kV)	100	115	130	130	130	130	100	130
Radio-influence voltge data	Test voltage to ground (kV)		7.5	7.5	10	10	10	10	7.5	10
	Maximum RIV at 1000kHz(μ V)		50	50	50	50	50	50	50	50
Electromechanical faiting load (kN)			44	67	67	67	111	111	44	160
Mechanical impact strength (n.m)			5	5.5	5.5	6	7	7	5	10
Time load test value (kn)			27	44	44	44	67	67	27	107

Shackle Insulators (BS)

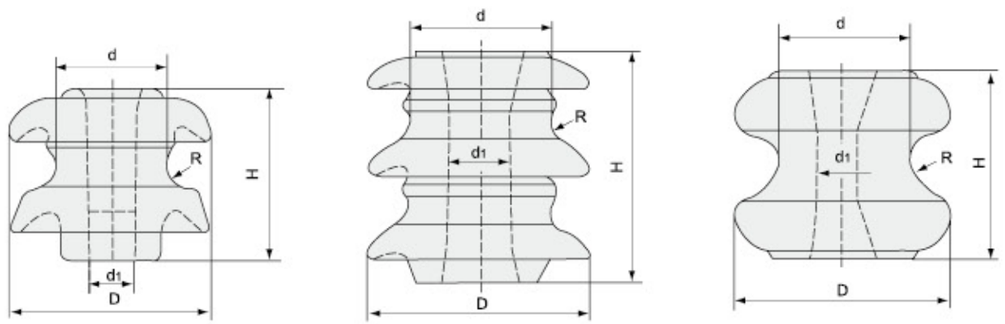

Fig 1 Fig 2 Fig 3

Main dimensions and standard particulars

Fig			2	1	1	3	3	3
Class BS			ED-2(C)	ED-2(B)	ED-2(B)1	1617	1618-1	1618-2
Main Dimensions (mm)	H		80	76	76	65	75	75
	D		80	89	89	76	89	89
	d		50	48	48	46	55	55
	d_1		22	21	17.5	17.6	17	17
	R		6	10	10	9	12.5	12.5
Mechanical failing load (kN)			13	12	12	9	10	13
Minimum flashover voltage	Power-frequency	Dry (kV)	25	25	25	20	20	25
		Wet (kV)	25	12	12	9	9	12
Weight (kg)			0.50	0.50	0.50	0.4	-	-

Spool Insulators (ANSI)

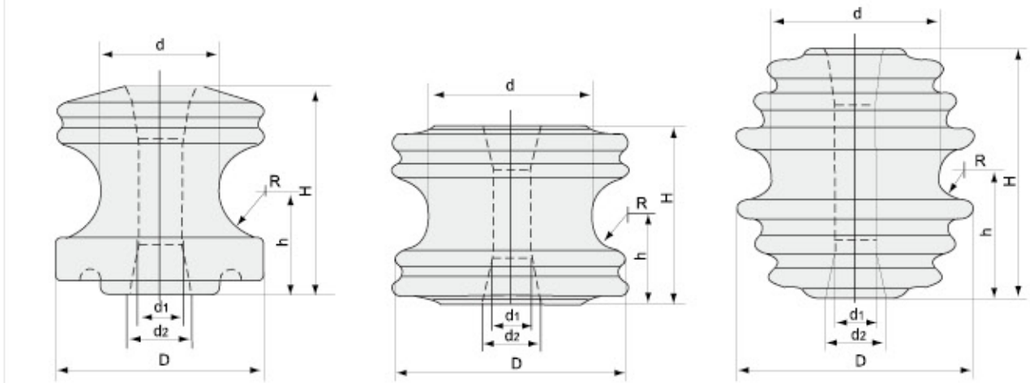

Fig 1 Fig 2 Fig 3

Main dimensions and standard particulars

Fig				2	1	2	2	3
Class ANSI				53-1	53-2	53-3	53-4	53-5
Main Dimensions (mm)	H			54	76	81	76	105
	h			27	38	40.5	38	52.5
	D			57	79	76	105	102
	d			45	45	45	73	73
	d^1			18	18	18	18	18
	d^2			22	24	24	24	24
	R			11	18	11	16	11
Mechanical failing load (kV)				907	1360	1814	2041	2722
Minimum flas-hover voltage	Power-frequency	Dry (kV)		20	25	25	25	25
		Wet (kV)	Upright	8	12	12	12	18
			Level	10	15	15	15	25
Weight (kg)				0.22	0.55	0.60	1.15	1.20

Shackle (Spool) Insulator

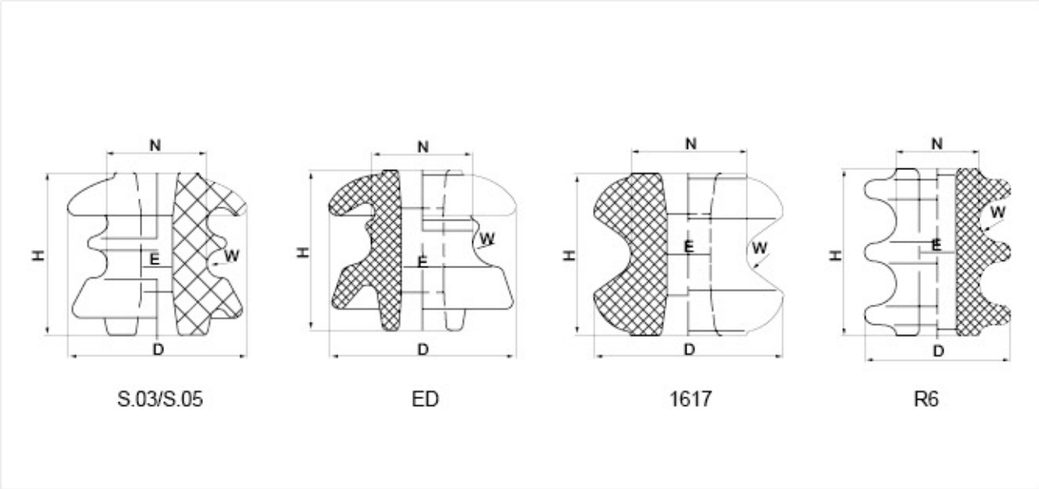

Main dimensions and standard particulars

BS CLASS		Shackle					Spool	
		S.03	S.05	ED-2	ED-2B	ED-3	1617	R6
Dimensions, mm	H - Height	57	75	75	76	65	65	80
	D - Diameter	63	88	80	89	70	76	70
	N - Neck Diameter	35	41	42	48	36	46	40
	E - Hole Diameter	11	17	20	21	16	17.5	18
	W-Wire Grooves Radius	5	8	10	10	8	9	10
Mechanical Failing Load, kN		6.25	15	10	12.5	8	9	240N
Power Frequency Flashover Voltage	Dry, kV	17	22	18	23	16	20	12
	Wet, kV	8	11	9	12	7	9	15
Net Weight, Each, Approx., kg		0.3	0.48	0.4	0.48	0.25	0.4	0.4

Wiring And Other Insulator

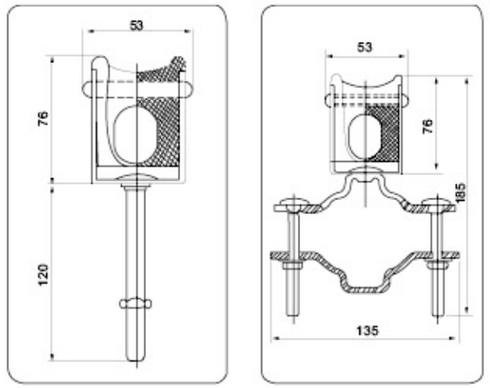

1 2

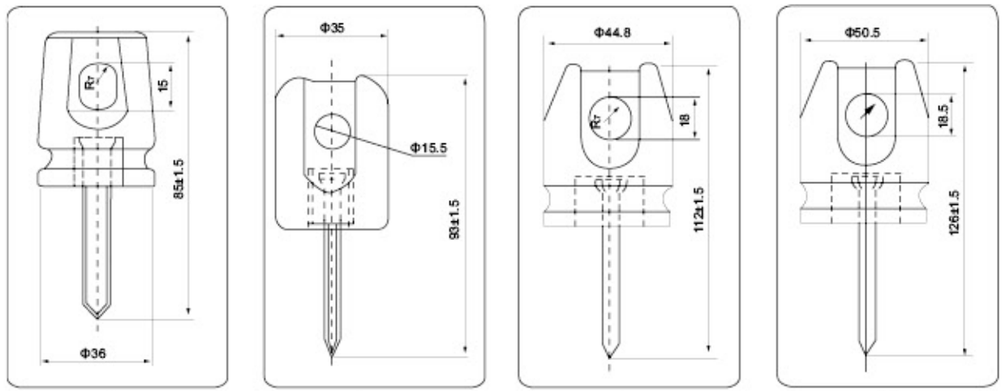

3 4 5 6

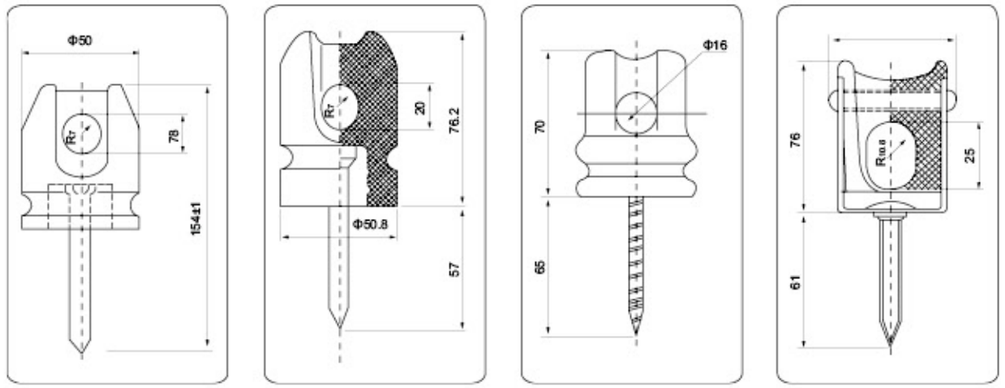

7 8 9 10

Post Insulators (ANSI)

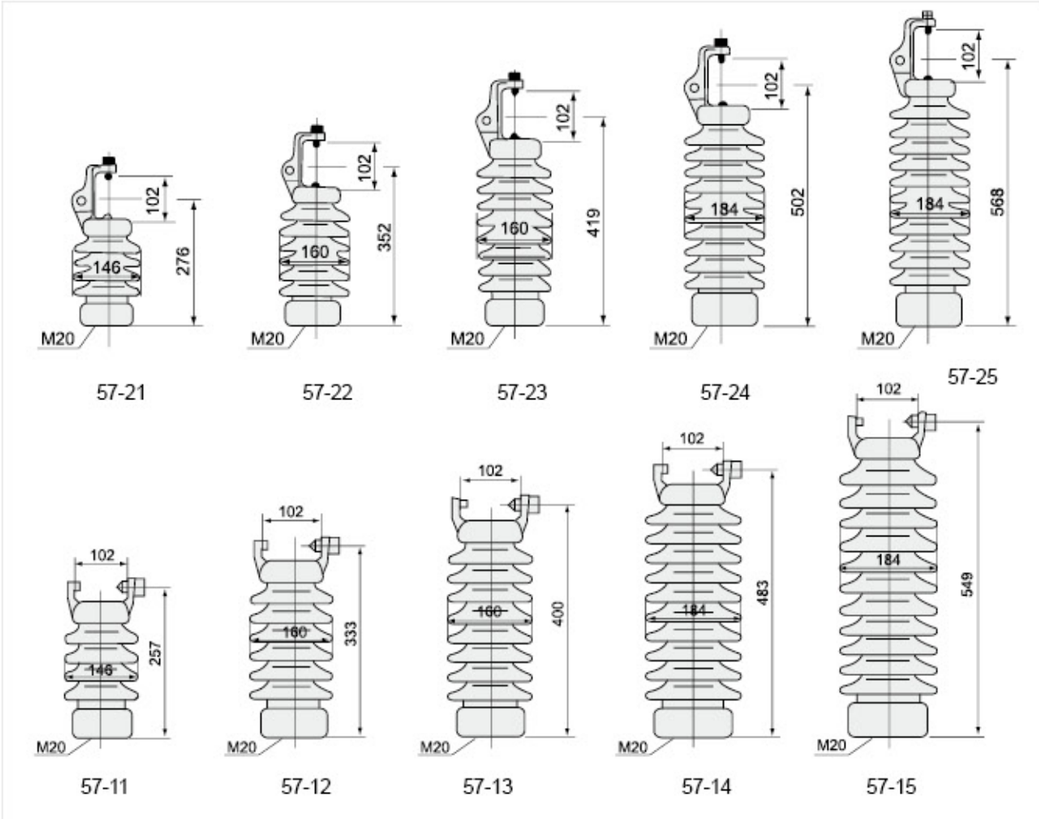

Main dimensions and standard particulars

ANSI Class	57-21	57-22	57-23	57-24	57-25	57-11	57-12	57-13	57-14	57-15
Creepage distance (mm)	356	559	737	1015	1145	356	559	737	1015	1145
Dry arcing distance (mm)	165	241	311	368	438	165	241	311	368	438
Cantilever strength (kN)	12.5	12.5	12.5	12.5	12.5	12.5	12.5	12.5	12.5	12.5
Low frequency dry flashover (kV)	80	110	125	150	175	80	110	125	150	175
Low frequency wet flashover (kV)	70	100	115	135	160	60	85	100	125	150
Critical impulse flashover, Pos (kV)	130	180	210	255	290	130	180	210	225	290
Critical impulse flashover, Neg (kV)	155	205	260	340	380	155	205	260	340	380
Test voltage to ground (kV)	15	22	30	44	44	15	22	30	44	44
Maximum RIV at 1000KHz (μ V) 1000KHz	100	100	200	200	200	100	100	200	200	200
Net weight, approx (kg)	7.5	10.5	12.7	16.8	19.5	6.8	10	11.8	15.9	18.6
Number in standrad package	6	3	3	2	2	6	3	3	2	2

Post Insulators (ANSI)

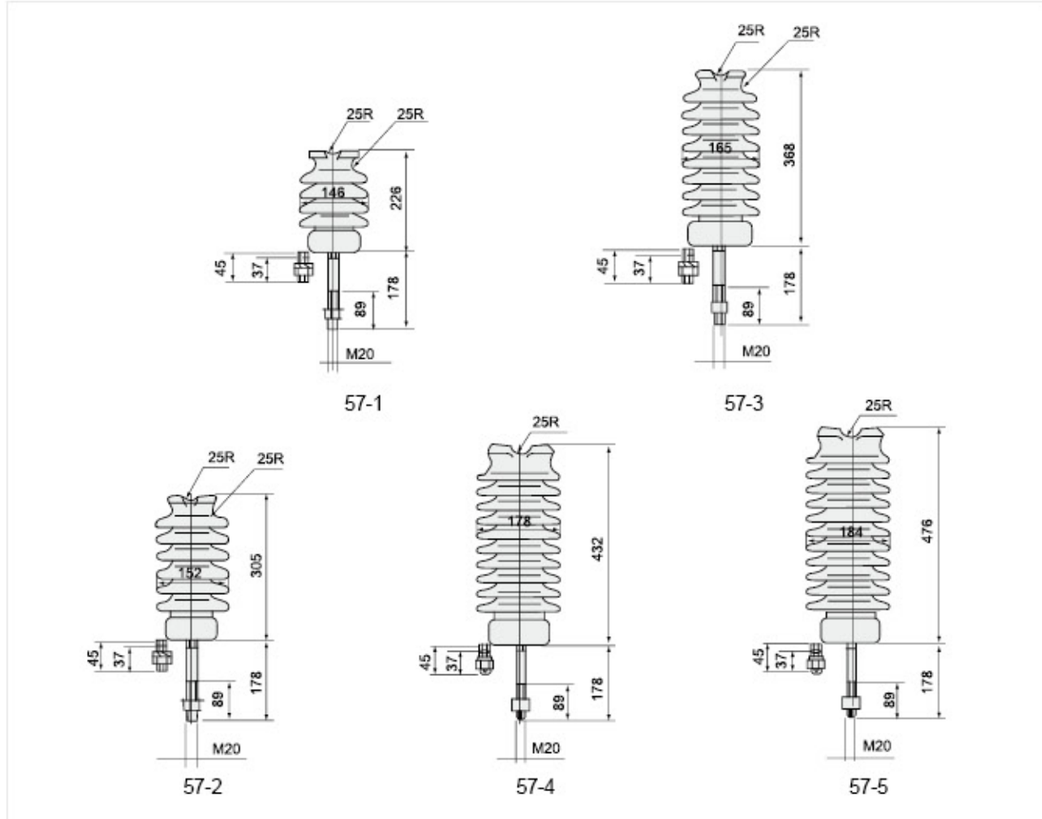

Main dimensions and standard particulars

ANSI Class	57-1S 57-1L	57-2S 57-2L	57-3S 57-3L	57-4S 57-4L	57-5S 57-5L
Creepage distance (mm)	356	559	737	1015	1143
Dry arcing distance (mm)	165	241	311	368	438
Cantilever strength (kN)	12.5	12.5	12.5	12.5	12.5
Low frequency dry flashover (kV)	80	110	125	150	175
Low frequency wet flashover (kV)	60	85	100	125	150
Critical impulse flashover, Pos (kV)	30	180	210	255	290
Critical impulse flashover, Neg (kV)	155	205	260	340	380
Test voltage to ground (kV)	15	22	30	44	44
Maximum RIV at 1000KHz (μ V) 1000KHz	100	100	200	200	200
Net weight, approx (kg)	5.0	9.5	11	16	18
Number in standrad package	6	3	3	2	2

Line Post Insulators

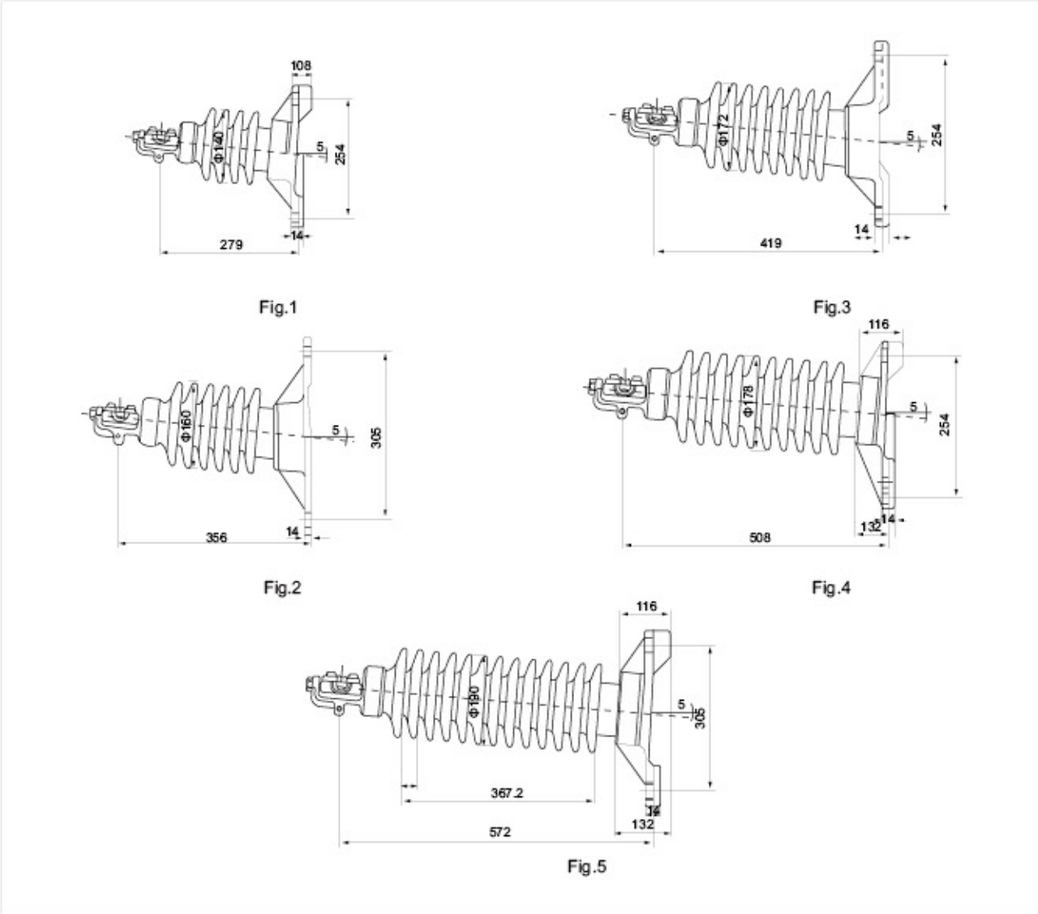

Main dimensions and standard particulars

Type			67-31	67-32	67-33	67-34	67-35
Figure No.			1	2	3	4	5
Creepage distance（min）		mm	356	559	737	1016	1143
Drying arcing distance		mm	165	241	311	368	438
Cantilever strength		KN	12.5	12.5	12.5	12.5	12.5
Power frequency flashover voltage	Dry	KV	70	100	125	140	160
	Wet	KV	50	70	95	110	130
Critical impulse flashover voltage	Positive	KV	120	160	200	230	265
	Negative	KV	155	205	260	340	380
Radio interference voltage	Test voltage to ground	KV	15	22	30	44	44
	Max.RIV at 1MHz	V	100	100	200	200	200
Net weight		kg	9.5	12.5	15.7	18.8	21.5
Applicable standard			ANSI				

Line Post Insulators

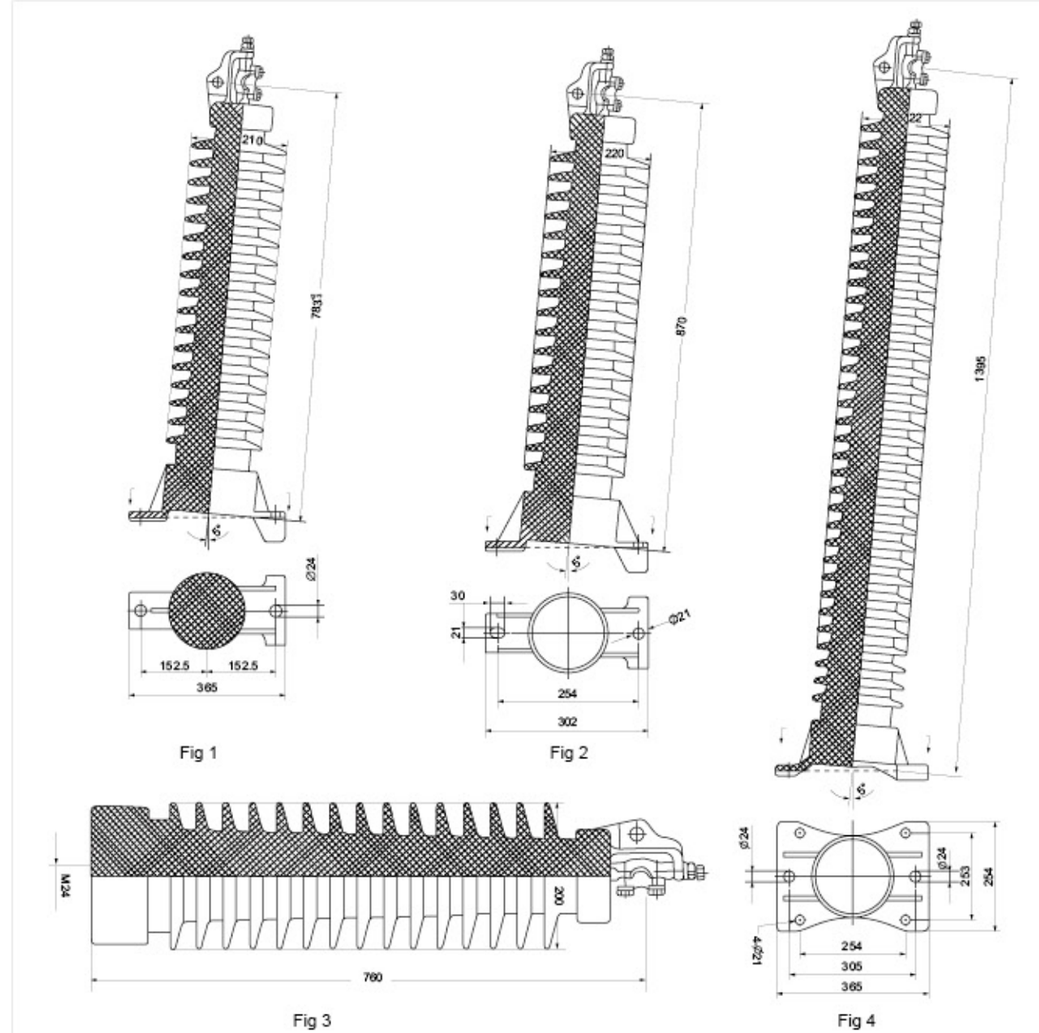

Main dimensions and standard particulars

Type		R11EH350L-870	R11EH-350	R11EH-650	R12.5EH350
Figure No.		2	1	4	3
Structure height	mm	870	783	1395	760
Creepage distance	mm	1800	1812	3625	1450
Drying arcing distance	mm	750	620	1200	600
Cantilever strength	KN	11	11	11	12.5
Lightning Impulse withsatnd	KV	350	350	650	350
Applicable standard		AS	AS	AS	AS

Top Clamp

The top clamp are suitable for ANSI Class 57-11 to 57-21 and 57-21 to 57-26 line post insullators.

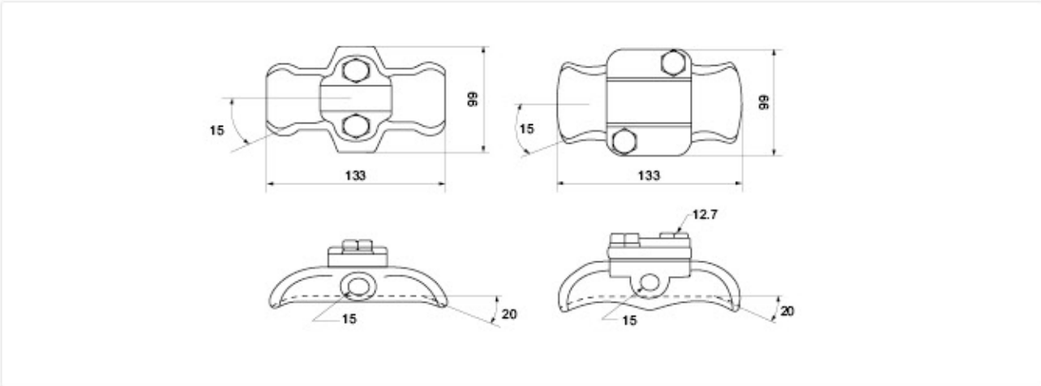

Clsaa No.	Malleable	57-11A1	57-11B1	57-11C1	57-11D1
	Aluminum Alloy	57-11A2	57-11B2	57-11C2	57-11D2
Outside Diameter of Conductor,mm	Max.	14..2	21.3	26.9	38.1
	Min.	6.35	8.89	12.7	25.4

Line post stud

The line post studs are suitable for ANSI 57-1 to 57-5 and 57-11 to 57-15 and 57-21 to 57-25 line post insulators

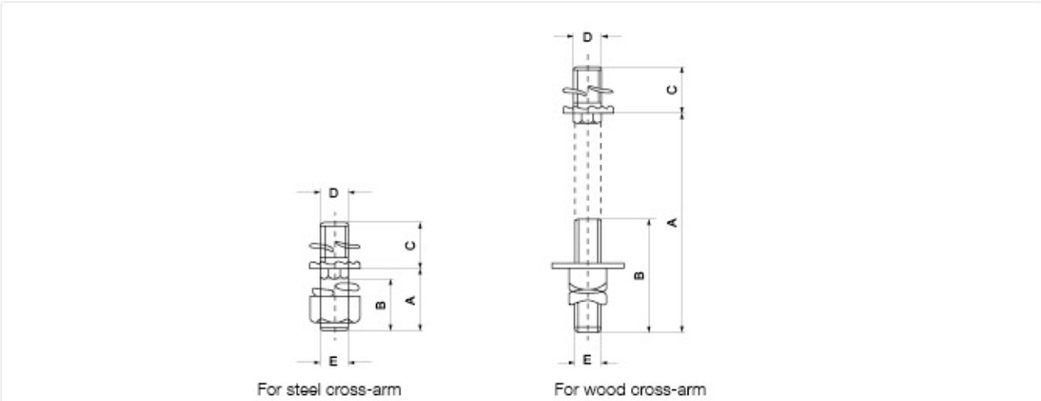

For steel cross-arm

For wood cross-arm

Kind of Cross-arm		Steel	Wood	Steel	Wood
Dimensions, mm	A	45	178	45	178
	B	37	89	37	89
	C	31	31	31	31
	D	M20	M20	M20	M20
	E	M16	M16	M20	M20

Strain Insulators For Lines (ANSI)

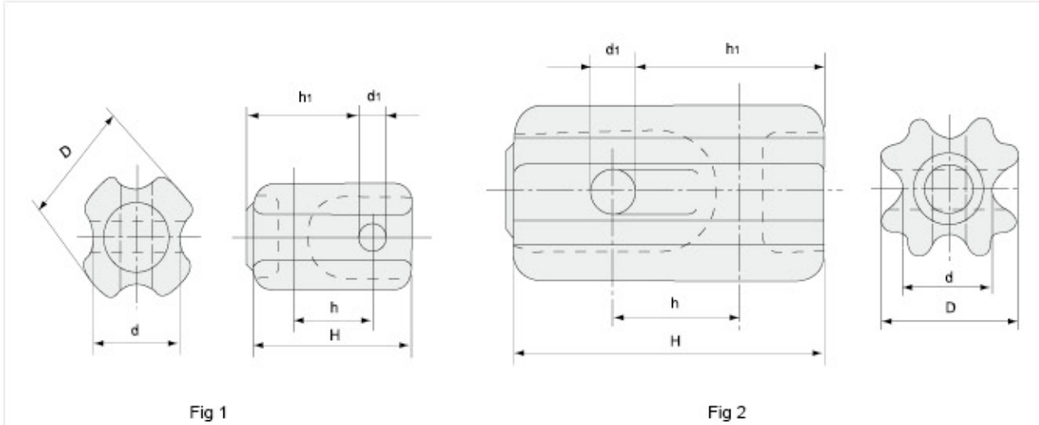

Fig 1

Fig 2

Main dimensions and standard particulars

Fig			1	1	1	2
Class ANSI			54-1	54-2	54-3	54-4
Main Dimensions (mm)	H		88	108	140	171
	h		44	57	79	69
	h1		64	76	103	114
	D		64	73	86	89
	d		44	54	60	60
	d1		16	22	25	25
Mechanical failing load (kV)			44	53	89	89
Creepage Distance (mm)			41	47	57	76
Flashover voltage	Power-frequency	Dry (kV)	25	30	35	40
		Wet (kV)	12	15	18	23
Weight (kg)			0.43	0.63	1.2	2

Guy Strain Insulator

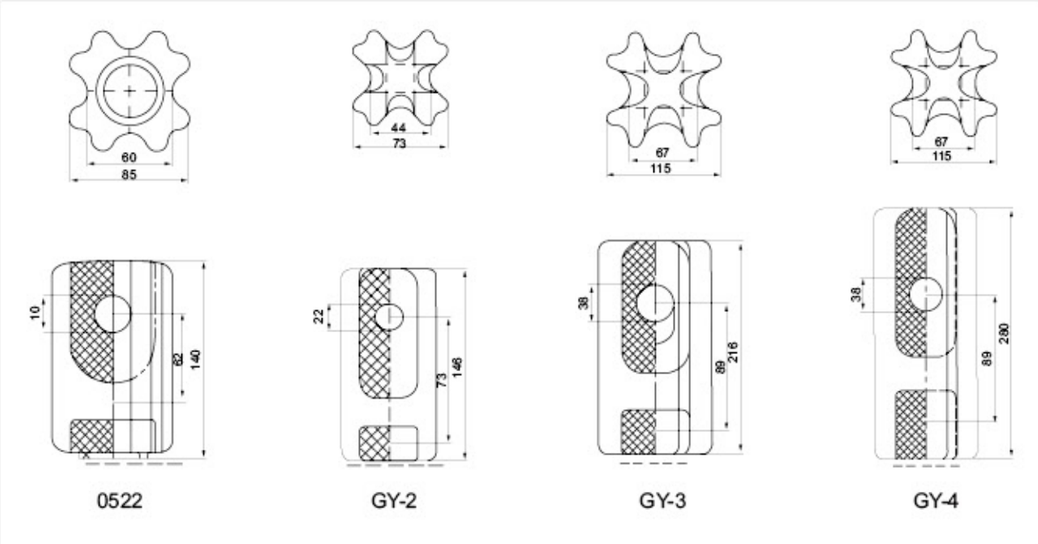

Main dimensions and standard particulars

BS CLASS		BS-137					AS-3609	
		11.1076	11.0522	11-3267G	GY-1	GY-2	GY-3	GY-4
Dimensions, mm	A - Height	78	140	220	90	146	216	280
	B - Hole Centers Spacing	50	62	80	48	73	89	89
	C - Inner Diameter	37	60	120	40	44	67	67
	D - Outer Diameter	57	85	135	68	73	115	115
	E - Cable Hole Diameter	19	19	22	16	22	38	38
	F - Height To Hole				60	99	133	165
Mechanical Failing Load, kN		45	110	110	27	71	222	222
Power Frequency Flashover Voltage	Dry, kV	30	35	23	/	/	/	/
	Wet, kV	15	18	48	10	15	20	30
Net Weight, Each, Approx., kg		1	1.4	4.8	0.7	1.25	3.8	5

DISCONNECT SWITCH AND LOAD BREAK SWITCH

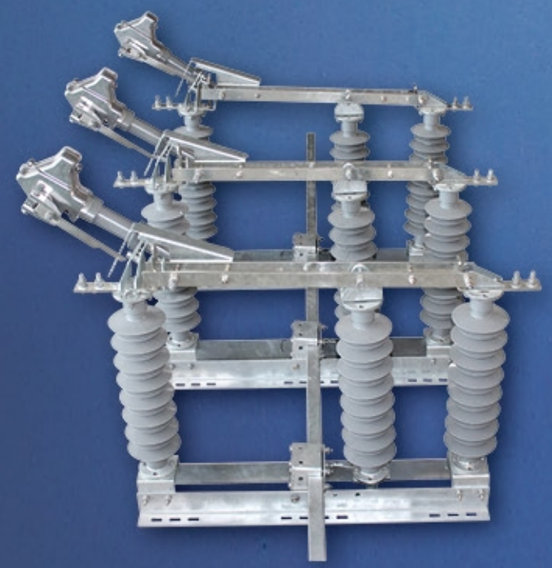

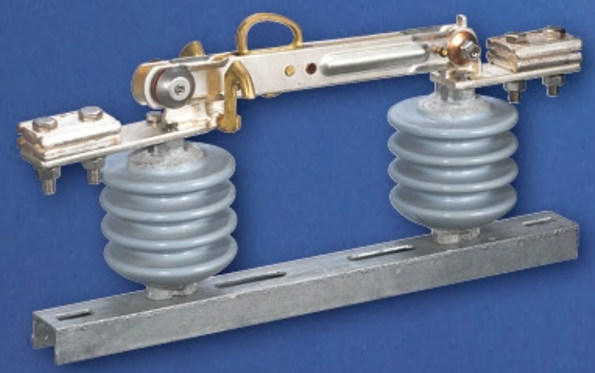

On Load Break Switch(Disconnector)

IEC/ANSI/IEEE/DIN
FW1-12/24/36

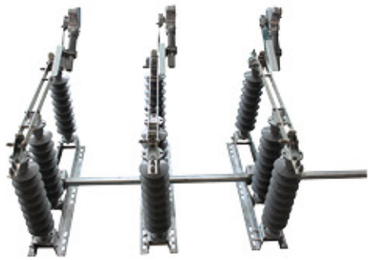

General

FW1 type Outdoor on load break switch (switch disconnector) contained in this list are destined to switch stub lines and ring main lines or transformers(It can be equipped with MV HRC fuse links as short circuit protection function) or for switching under on load conditions. FW1 type switch comply with IEC/IEEE and DVE-recommendation standards. Especially comply with DIN VDE 0670 part 3 and IEC publication IEC-60265, IEC-129.

Service environment

a)Air temperature: Maximum temperature: +75℃ ; Minimum temperature:-45℃
b)Humidity: Monthly average humidity 95%; Daily average humidity 90% .
c)Altitude above sea level: Maximum installation altitude: 2500m
d)Ambient air not apparently polluted by corrosive and flammable gas, vapor etc.
e)No frequent violent shake

Features and benefits

- Compact design
- All steel parts either in stainless steel or hot-dip galvanized
- Solid and stable base frame
- Main contact with icing protection
- Insulators available in porcelain or alternatively in silicone
- Minimal sag for the line-connection thanks to the two fixed terminals
- Completely maintenance antirust AL alloy -Arc chamber
- Switching-off procedure without external arc
- Short circuit making capacity under specific conditions possible
- Fixing on the supporting structure either by clamping (free setting) or screwing (holes in the base frame)
- Easy on-site installation and setting
- High reliability: up to 1' 000 cycles (depending on the making current)
- All conducting parts either silver, nickel or tin-plated
- Practically maintenance-free

On Load Break Switch(Disconnector)

Main technical specifications

No.	Item		Unit	Data		
1	Rated voltage		kV	12	24	36
2	Rated frequency		Hz	50/60		
3	Rated current		A	200/400/630		
4	Rated short circuit withstand current (1S)		kA	20		
5	Rated peak withstand current (1S)		kA	50		
6	Rated making current		kA	31.5-50		
7	Rated insulation level(HV)	lightning impulse	kV	75/85	125/145	170/195
		Power frequency withstand		45	55/75	75/100
8	Rated short circuit breaking capacity cos. Φ（0.7）Without maintenance of contacts			----------		
	for active circuits	20 breakings	A	630	630	400
		30 breakings		400	400	300
		40 breakings		300	300	250
		50 breakings		250	250	170
		75 breakings		170	170	160
		120 breakings		110	110	110
		200 breakings		65	65	65
		280 breakings		50	50	50
9	For ring circuits breaking capacity			630	400	250
10	Rated breaking capacity of transformer			50		
11	Rated breaking capacity of cable charging			11		
12	Rated breaking capacity of earthing fault			55		

FW1-12kV

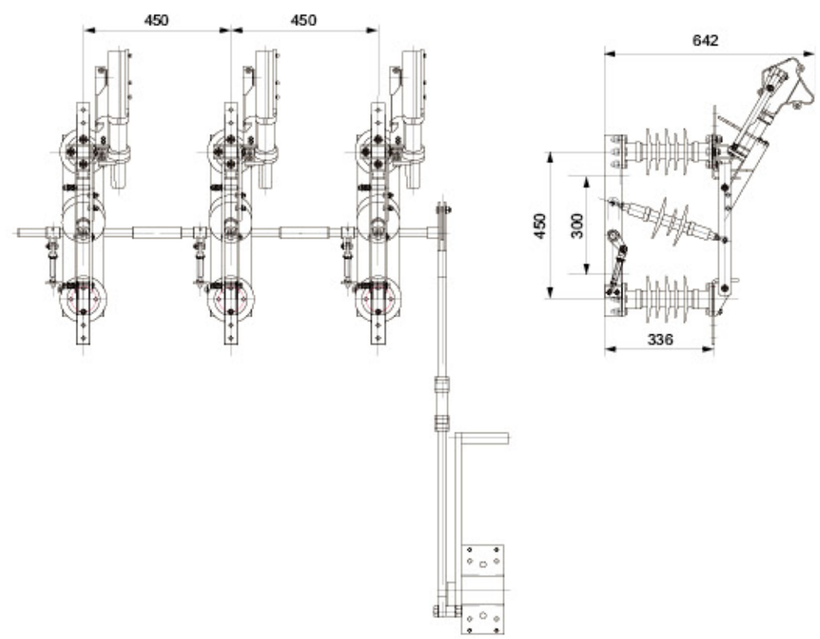

On Load Break Switch(Disconnector)

FW1-24kV

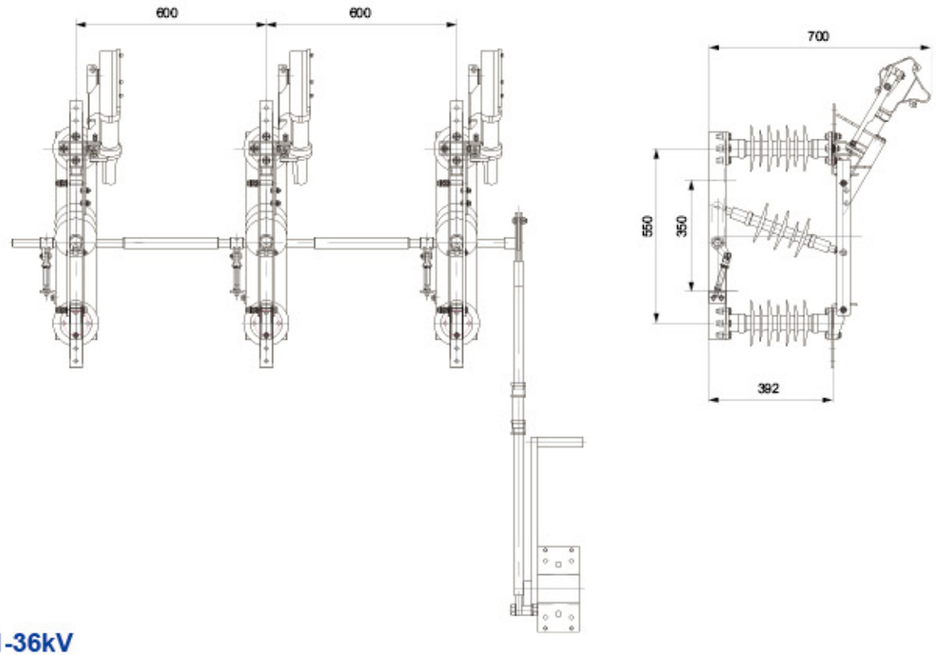

FW1-36kV

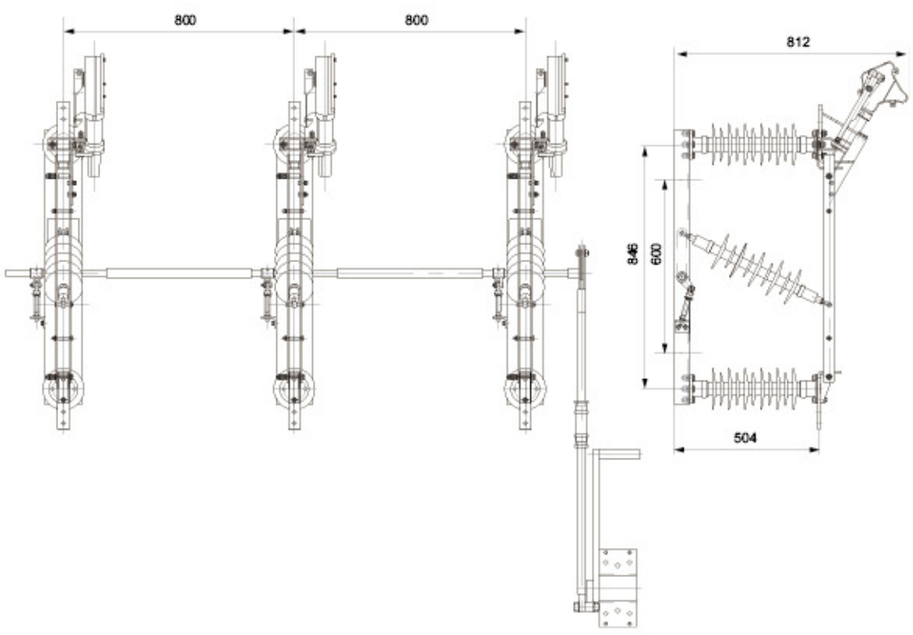

GW25 Outdoor High Voltage Disonnect Switch For Substation

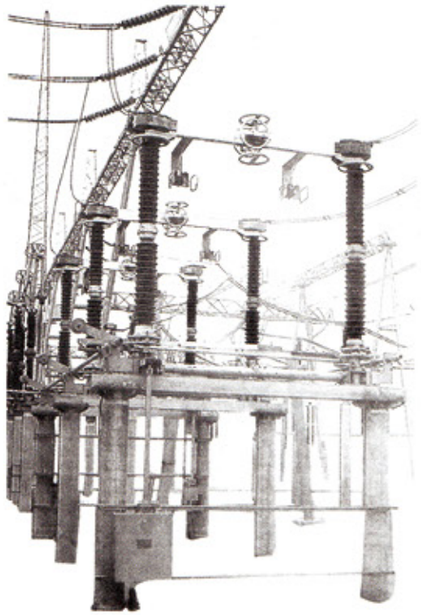

General

GW25 outdoor high voltage disonnector switch has a double-column , horizontal , central, interruption structure,It is an equipment used for 50/60Hz three phase AC ,outdoor high voltage transmission and distribution system to switch and disconnect the circuit.

For this type disonnector switch, part of terminal is in contractless condition with the flexible conductor ,leading to a stable and reliable electricity performance.And the contact part adapt a safe and fixed device,so that contact and finger will not be separated by external force(like Strong Wind, Earthquake, Electric Power,etc.) when the disonnector switch in the close statement.

The base part adapt a multi-bearing structure to make the switch can operate flexibly in a long-term. Meanwhile, interphase drag rod and vertical link rod can adjust within ±20mm when in site installation. Because vertical link rod rotates 190° when disconnector is operated by operating mechanism, and then it constitutes a 5° dead-point structure at the open and close critical position ,so that make the switch cannot open and close automatically even under the external force.

Disconnector body can be equipped with grounding switch,which contain a mechanism can rotates 90° around its own long axis,so that the switch can operate flexibly.

When grounding switch close, it cannot happen contact separation even under the external force, also can bear the dynamic, thermally stable current same with the disconnecting switch.

Grounding switch and disconnecting switch with reliable mechanical interlock device,

Grounding switch also can like disconnecting switch to operate by the operating mechanism, otherwise, manual mechanism and motor mechanism can interchange.

GW25 Outdoor High Voltage Disonnect Switch For Substation

Technical Specification

Rated Voltage kV	Rated Current A	Dynamic Current (peak) kA	Thermal Current (RMS) kA-s	Power frequency withstand voltage (RMS) kV		Lightning impluse withstand voltage (peak) kV		Terminal static tension (N)	Creepage distance mm		Weight (three phase) kg
				To earth	Across the isolating diatance	To earth	Across the isolating diatance		Common	protect pollution	
36	630	50	20-4	80	95	185	215	500	650	875 1225	487
	1250	80	31.5-4								496
	1600	100	40-4								593
	2000										670
	3150	125	50-3								700
	4000	1600	63-3								800
72.5	630	50	20-4	140	160	235	375	500	110	1600 2205	690
	1250	80	31.5-4								700
	1600	100	40-4								800
	2000										880
126	630	50	20-4	230	265	550	630	750	2000	2750 3150	751
	1250	80	31.5-4								765
	1600	100	40-4								860
	2000										940
	3150	125	50-3								960
145	630	50	20-4	275	315	650	750	750	2400	3800	970
	1250	80	31.5-4								1000
	1600	100	40-4								1100
	2000										1180
252	630	50	20-4	460	530	1050	1200	1000	4040	5500 6300	1990
	1250	100	40-4								2100
	1600	125	50-3								2200
	2000										2280
	3150	160	63-3								2300
	4000										2400

RH-B-11/33kv Outdoor Gang Isolator Switch

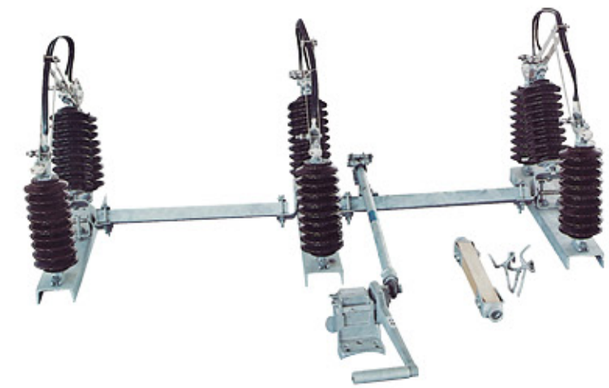

Summary

Outdoor AC Gang isolator switch 11KV/400A-33KV/600A used in 3 phase AC 50/60Hz power circuit, it is used as switching on and switching off at the voltage with no load. It apply to IEC standard. IEC60964: 1996, IEC62271-102:2002

Technical Specification

Type	Rated voltage (kV)	Rated current (A)	4S heat steady e.c. (A)	Rated peak withstand current (A)	Impulse withstand voltage		Power-frequency withstand voltage	
					To earth (kV)	Across the isolating distance (kV)	To earth (kV)	Across the isolating distance (kV)
RH-B	11	400	12500	31500	75	95	38	42
	33	600	12500	31500	170	195	70	80

Outline Dimension

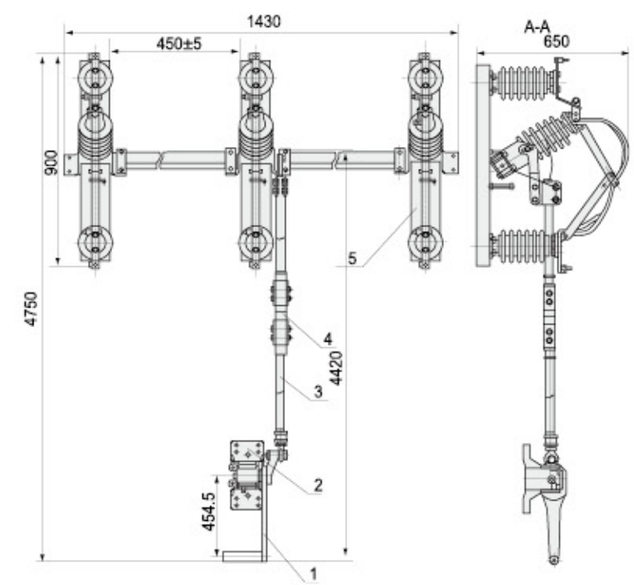

GWR-12/36 Outdoor AC High Voltage Disconnect Switch (Fuse Type)

Summary

GWR-12/36 outdoor AC. high voltage fused type disconnect switch (disconnect switch for short) is used in electric power system with rated frequency 50/60Hz, rated voltage 12/36kV. Its main for making or breaking circuit under line supplying voltage in outdoor high voltage distribution system equipments. Thereof anti-pollution type disconnect switch is especially used in serious polluted area. It accords with standards of IEC62271-103: High voltage switches.

Ambient Condition

- Altitude: ≤1000m;
- Ambient temperature: +50℃ ~-30℃ ;
- Wind speed: ≤35m/s;
- Earthquake intensity: ≤8 degree;
- Air pollution: IV;
- Ice thickness: ≤10mm;
- Applicable occasions of normal type switch should free from chemistry aggradation, dust and other volatile & caustic thing.

Model

G W R - 12(36) / 100

- 100 — Rated current
- 12(36) — Rated voltage
- R — Fuse
- W — Outdoor
- G — Disconnect switch

Structure Feature

Disconnect switch is composed of fuse components, frame and operating insulator, fixed contact, contact blade and linkage spring mechanism.

- Cutout fuse assemble: mainly combine with upper, down movable and fixed contact, arc extinguish bushing, insulator and mount support parts, during normal work, the fuse linking the moving joint of the arc extinguish bushing with movable contactor, the arc extinguish bushing is at closed position under the pressure of the fixed contactor.
- Frame: Base is bended from steel sheet, axis with pulling arm cross through frame center. Holes drilled on base are used for fixing post insulator.
- Post and operating insulator: anti-erode post insulator.
- Fixed contactor: contact blade made of red copper plate, fixed on post insulator and extended level plane end as for connecting wire and upside of curve connected both side reliable with contacting blade.
- Contact blade: it's made of two rectangle section red copper plates, both ends of contact blade attached with spiral spring to adjust contacting pressure.
- Switch could be operated combined with CS mechanism vertical mounting on outdoor double electric poles.

GWR-12/36 Outdoor AC High Voltage Disconnect Switch (Fuse Type)

Technical Specification

No.	Item		Unit	Data	
1	Rated voltage		kV	12	36
2	Rated current		A	100	100
3	Rated frequency		Hz	50/60	50/60
4	Maximum breaking current		kA	5	5
5	Main circuit resistance		μ Ω	≤150	≤150
6	1min. PF withstand voltage (dry)	Phase to phase/ earth across open contacts	kV	42/48	95/115
7	1min. PF withstand voltage (wet)			30	85
8	Lightning impulse withstand voltage			95/110	185/215
9	Mechanical life	Disconnect switch	Times	2000	2000
		Fuse cutout		300	300

Outline Dimension

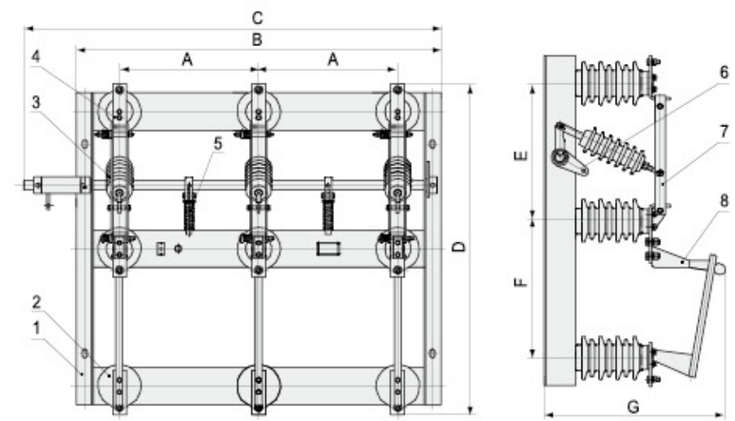

1. Frame
2. Post insulator
3. Porcelain insulator
4. Contact
5. Spring
6. Rotate shaft corner arm
7. Disconnect blade
8. Cutout fuse

Type	Main outline dimenstion(mm)						
	A	B	C	D	E	F	G
GWR-12/100	400	1050	1200	1073	400	490	667
GWR-36/100	500	1300	1450	1433	550	640	909

GW1-12/36 Outdoor Disconnect Switch

Summary

GW1-12(36)/630-20(25) outdoor AC high voltage disconnect switch (disconnect switch for short) is used to open and close circuit with voltage but no-load 50/60Hz, 12(36)kV power system, The anti-pollution type can be used in the serious pollution area. Three pole linkage, good synchronous performance.

Ambient Condition

- Altitude: ≤3000m;
- Ambient temperature: -30℃ ~+40℃ ;
- Wind speed: ≤35m/s;
- Air pollution: IV;
- Earthquake intensity: ≤8 degree;
- Ice thickness: ≤10mm.

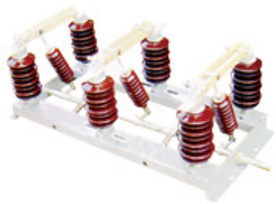

Model

G W 1 - 12(36) / 630 - 20/25

- Rated short-time withstand current(kA)
- Rated current(A)
- Rated voltage(kV)
- Design serial No.
- Outdoor
- Disconnect switch

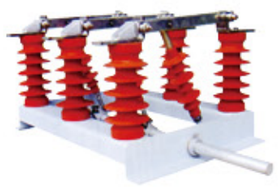

Technical Specification

No.	Item		Unit	Data	
1	Rated voltage		kV	12, 36	
2	Rated current		A	630	
3	Rated power frequency		Hz	50/60	
4	Rated peak withstand current		kA	50,63	
5	Rated short-time withstand current		kA	20,25	
6	Rated short-time withstand current duration		S	4	
7	Main loop resistance		μ Ω	12kV≤90	36kV≤100
8	1min. PF withstand voltage (dry)	Phase to phase/ earth across open contacts	kV	42/48	95/115
9	1min. PF withstand voltage (wet)			30	85
10	Lightning impulse withstand voltage			75/85	185/215
11	Mechanical life		Times	200	

Structure Feature

- This disconnect switch consists of frame, operating insulating, static contactor, blade, linkage spring mechanism, etc.
- Frame: 5mm chickness bended armor plate, there are holes on the frame to fixed post insulator.
- Post and operating insulator: adopt ZS-12, 36 series outdoor clubbed post insulator, The mini resist bend load is 4000N.
- Static contactor: it is made of violet copperplate and fixed on post insulator.
- Blade: it is made of rectangular violet copperplate, there is an press-spring to adjust press.
- The switch vertical or horizontal installed in outdoor with CS □ mechanism.

GW1-12/36 Outdoor Disconnect Switch

Outline Dimension

Fig.1 GW1-12, 36

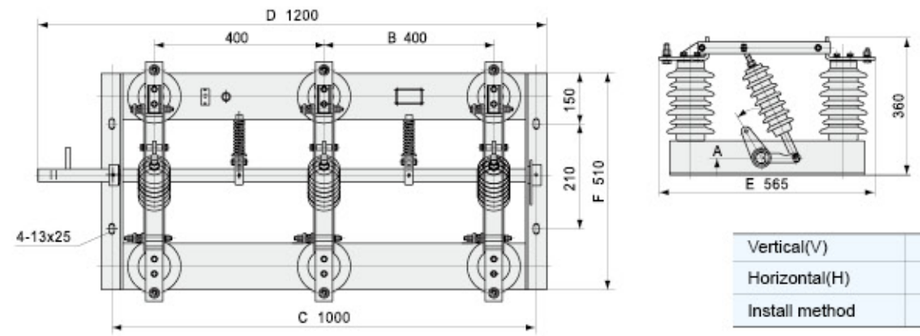

Vertical(V)	130°
Horizontal(H)	50°
Install method	A

Type	B	C	D	E	F
GW1-12/630-20	400	1000	1200	565	510
GW1-36/630-20	500	1250	1450	815	728

Fig.2 GW1-12, 36D witch earthing blade

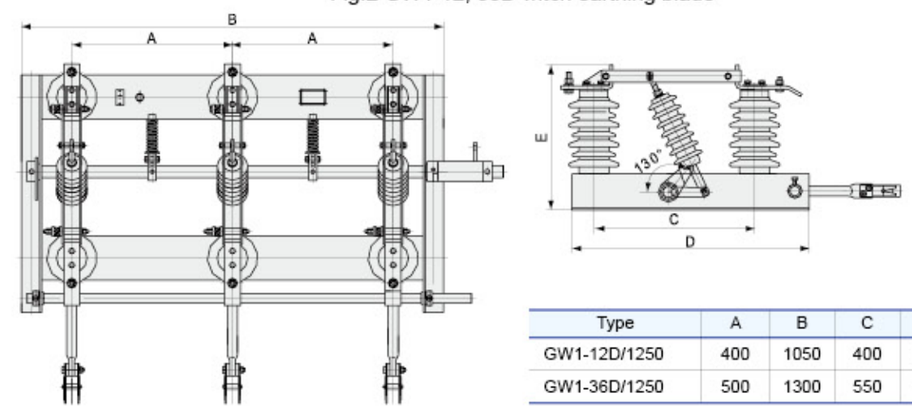

Type	A	B	C	D	E
GW1-12D/1250	400	1050	400	590	403
GW1-36D/1250	500	1300	550	630	620

Fig.3 GW1-12, 36D with earthing blade and lightning arrester

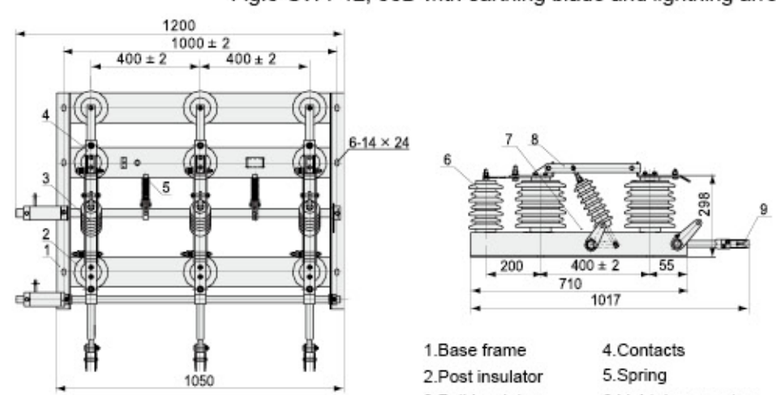

1.Base frame
2.Post insulator
3.Pull insulator
4.Contacts
5.Spring
6.Lightning arrester
7.Rotating shaft turning arm
8.Contact blade
9.Earthing blade

RH-A-15KV/27KV/38KV Outdoor Disconnect Switch(Distribution Type)

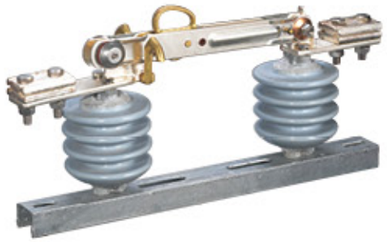

Summary

Outdoor disconnect switch used in 15KV、27KV and 38KV power distribution systems, with current from 200 to 630A. and it used as switching on and switching off at the voltage with no load.

Technical Specification

Nominal voltage (kV)	Maximum voltage (kV)	BIL (kV)	Nominal current (A)	Transient current (kA/ls)	Dimensions			
					A	B	C	D
13.8	15	95	200/630	16	305	270	580	186
13.8	15	95	630	25	305	313	595	230
13.8	15	110	200/630	16	381	270	650	186
13.8	15	110	630	25	381	313	670	230
24.2	27	125	200/630	16	381	310	650	228
24.2	27	125	630	25	381	340	670	260
34.5	38	150	630	25	381	368	670	290
34.5	38	170	630	25	381	400	670	316

Outline Dimension

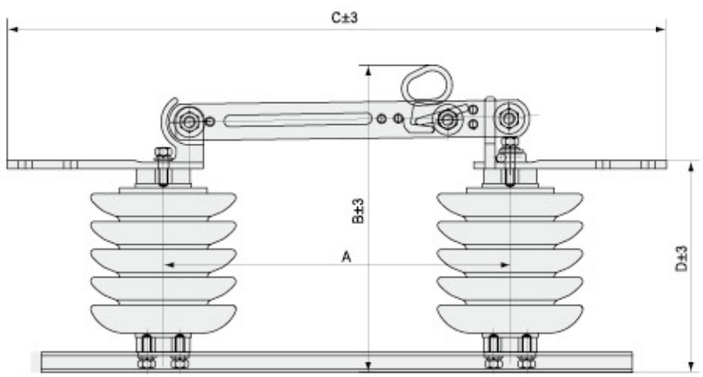

Memo