ezitown

温控器、加热器产品选型手册
Thermostat & Heater Products Manual

Yueqing Yidatong (Ezitown) Electric Co.,Ltd
Web：www.ezitown.com
E-mail: sales@ezitown.com
Mobile(WhatsApp/Wechat):+86-13566125299
Add:49 Jinma Ws Rd,Liushi,Yueqing,Zhejiang,China 325604

About us

关于我们

我们公司成立于2008年，是一家集研发，生产，销售，服务为一体的综合性科技型企业。公司主要生产柜体温控器，柜体加热器，柜体湿控器，风机过滤器等等。我们产品已经通过了ISO9001:2008质量安全体系，并且产品都获得了CE,ROSH证书，并且和ABB，西门子建立了多年的合作伙伴关系。

所有的产品在发货前必须通过成品和半成品测试。为了确保产品质量，在生产期间我们都会用主机来控制生产流程，及时确保质量。产品的废品率被严格控制在千分之一以内，有一年质保。如果质保期内出现质量问题，废品将会立马被退换。

我们的宗旨是给客户高质量的产品和最好的服务,来建立长期的合作关系，欢迎各界朋友莅临参观，指导和业务洽谈。

Our company established in 2008, specially in development, producing, sales and service of enclosure thermostat, heater, hygrostat,filter fan and so on in China.We have got ISO9001: 2008 certification, our products have got CE, ROSH certification. We have already been a long term supplier of ABB, SIEMENS for many years.

All the products must pass the half-finished 100% testing and 100% finished testing before delivery. For double guarantee, we use point key controlling during producing process, to monitor quality in time.The fault rate of our products is strictly controlled within 1/1000,with one year warranty.If any quality problems in warranty,the one will be changed.

Our target is to offer high-class quality products and best service，to build long term business with our customer is our final content. Welcome your cooperation with us in the future.

Content

目录

7T.81

	7T.81-240	7T.81-230
	1NC(SPST-NC) 10A 250V AC	1NO(SPST-NO) 10A 250V AC
	AC1 2500 VA AC15 (230V AC) 250 VA AC3 (230V AC) 1.1 KW DC1 (30/110/220)V (1/0.3/0.15)A	
K	7±4	
	(-45...+80)°C	
IP	IP20	

0.5Nm

(1x2.5) mm²
(1x12) AWG

(1x1.5) mm²
(1x16) AWG

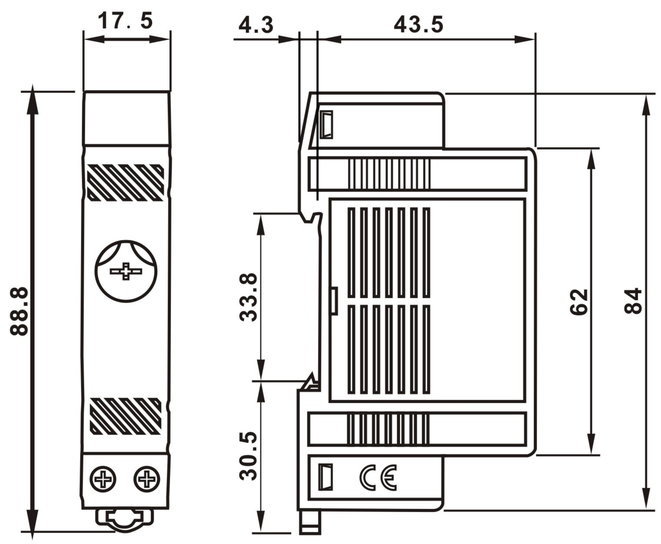

CE RoHS 03 Type of action:1B
Pollutino degree:2

Setting Range	Art.No. (NC) 7T.81-240	Art.No. (NO) 7T.81-230
-20 to +40°C	7T.81-2401	7T.81-2301
-10 to +50°C	7T.81-2402	7T.81-2302
0 to +60°C	7T.81-2403	7T.81-2303
+20 to +80°C	7T.81-2404	7T.81-2304
+32 to +140°F	7T.81-2405	7T.81-2305
+14 to +122°F	7T.81-2406	7T.81-2306
-15 to +45°C	7T.81-2407	7T.81-2307

7T.81-240

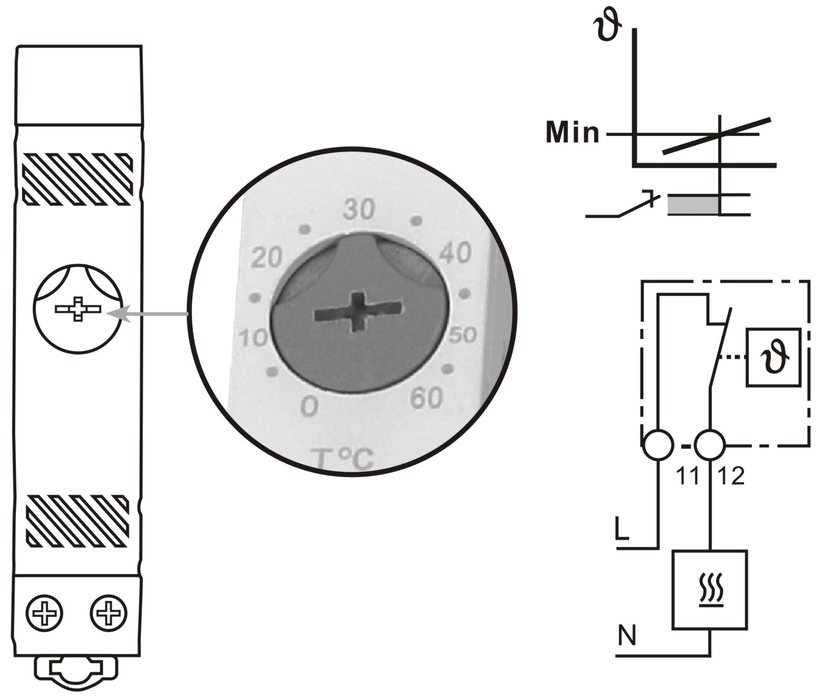

7T.81-230

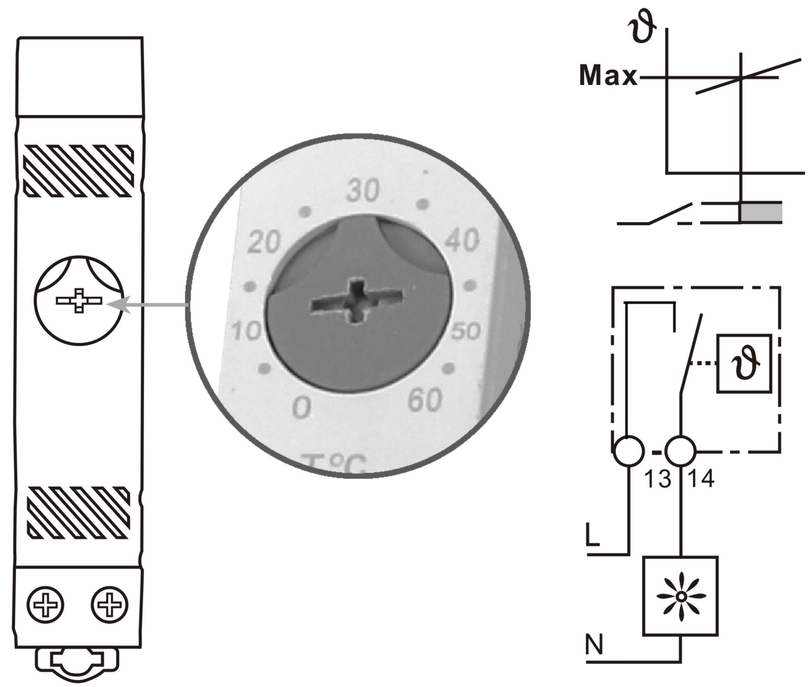

Thermostst

ezitown INDUSTRIALTHERMOSTAT

HY-TC601: Thermostat (normally closed); contact breaker for regulating heaters. The contact opens when temperature is rising.

HY-TC602: Thermostat (normally open); contact maker for regulating of filter fans and heat exchangers or for switching signal devises when temperature limit has been exceeded. The contact closes when temperature is rising.

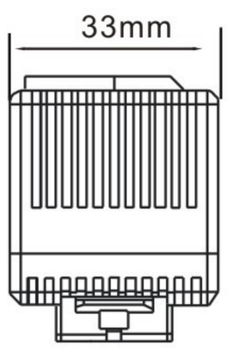

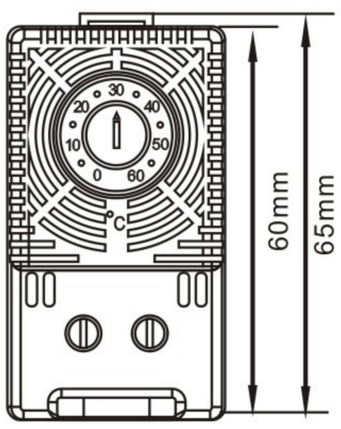

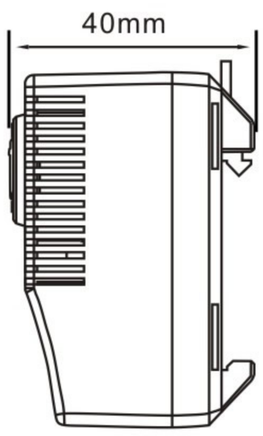

HY-TC601	HY-TC602
1NC(SPST-NC)	1NO(SPST-NO)
Max switchingcapacity	250V AC 10(2)A 120V AC 15(2) AC DC (30/110/220)V (1/0.3/0.15)A
Operating/Storage temperature	(-45...+80)℃
Switch temperature difference K	7±4
Protection type	TP20
Service life	>100 000cycles
Mounting	clip for 35mm DINrail EN60715
Casing	plastic according to ULV-0,light grey

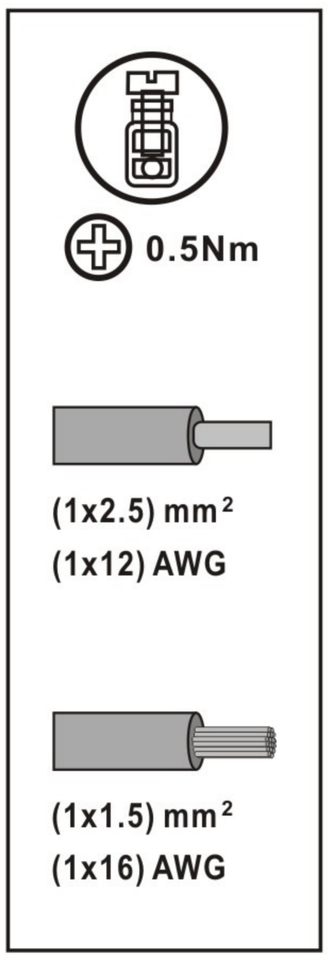

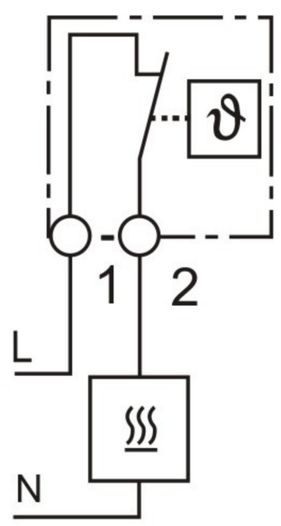

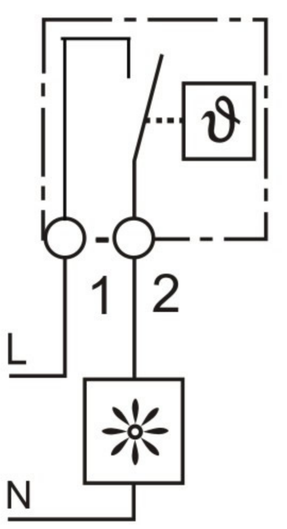

Example of connection

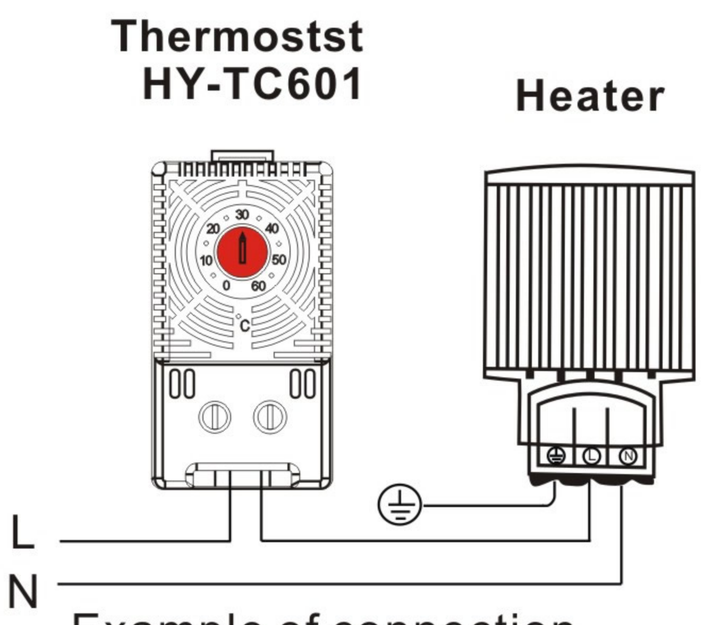

Example of connection

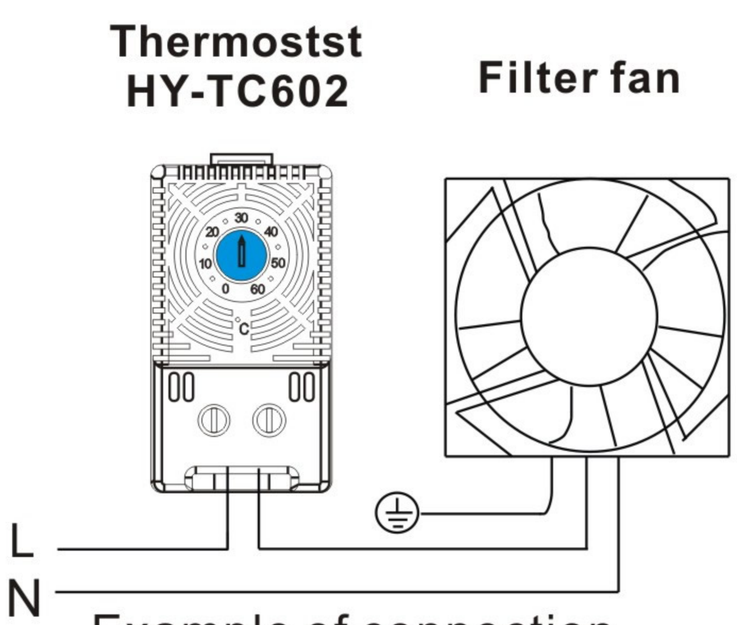

Example of connection

setting Range	Art.No.(NC) HY-TC601	Art.No.(NO) HY-TC602
0 to +60℃	6010	6020
−20 to +40℃	6011	6021
−10 to +50℃	6012	6022
+20 to +80℃	6013	6023
+14 to +122℉	6014	6024
+32 to +140℉	6015	6025
−15 to +45℃	6016	6026

ezitown

小型自动恒温调节器
Small,Compact Thermostat KTO 011/KTS 011

- ◎ Large setting range /设定范围广
- ◎ Small size /体积小
- ◎ Simple to mount /便于安装
- ◎ High switching performance /高切换性能

KTO 011：The rmostat(normally closed)，contact breaker for regulating heaters.
KTS 011：Thermostat(normally open)，contact maker for regulating of filter fans and heat exchangers or for switching signal devised when temperature limit has been exceeded.
KTO 011：温控器(常闭)，用于调控加热器。
KTS 011：温控器(常开)，当温度超出设定值时开关装置可以启动风机或信号装置。

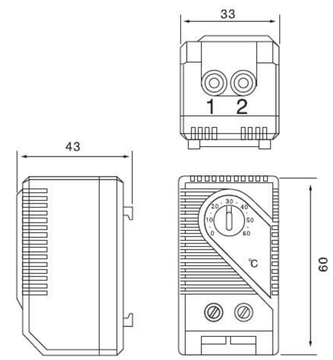

Technical Data 技术参数	
Switch temperature difference 切换温差	7K(±4K tolerance) 7K(±4K公差)
Sensor element感应元件	thermostatic bimetal恒温双金属片
Contact type接触器种类	snap-action contact突跳式接触头
Contact resistance接触电阻	<10mΩ
Service life使用寿命	>100 000 cycles >100 000周期
Max switching capacity最高切换负荷	250VAC，10(2)A
	120VAC，15(2)A
	DC 30W
EMC电磁兼容性	acc to EN 55014-1-2. EN 61000-3-2. EN 61000-3-3 符合欧盟EN 55014-1-2，EN 61000-3-2，EN 61000-3-3标准
Connection接线	2-pole terminal. clamping torque 0.5Nm max: rigid wire 2.5mm², stranded wire(with wire end ferrule)1.5mm² 2极端子台，夹紧最大扭矩0.5Nm: 钢性线 2.5mm²，钢绞线(线端带铁包)1.5mm²
Mounting安装方式	clip for 35mm DIN rail，EN50022(or for exit filter EF 118 Series) 卡槽适于DIN35导轨
Casing外壳	plastic according to UL94 V-0，light grey塑料, UL, 浅灰
Dimensions 外形尺寸	60 × 33 ×43mm
Weight重量	Approx. 40g,约40克
Fitting position安装方向	Variable 任意
Operating/Storage temperature 工作/储存温度	-20 to+80℃(-4 to+176°F)/-45 to+80℃(-49 to+176°F)
Protection type保护等级	IP20

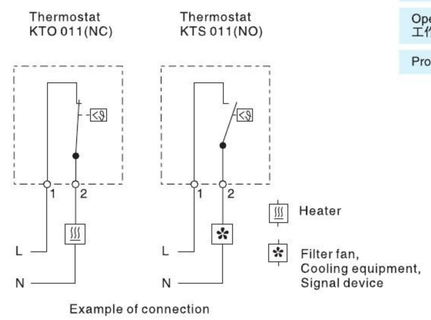

Example of connection

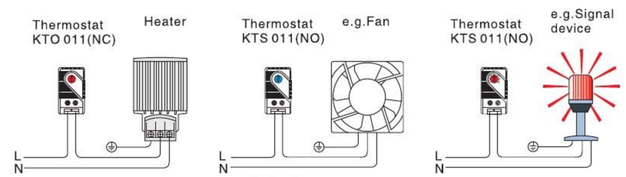

接线示意图：Example of connection

设定范围Setting range	订货代号Art.No. Contact Breaker(NC)	订货代号Art.No. Contact macker(NO)
0 to +60℃	01140.0-00	01141.0-00
-10 to +50℃	01142.0-00	01143.0-00
+20 to +80℃	01159.0-00	01158.0-00
+32 to +140℃	01140.9-00	01141.9-00
+14 to +122°F	01142.9-00	01143.9-00
0 to +60℃	01146.9-00	01147.9-00

小型自动恒温调节器
Small,Compact Thermostat FKO 011/FKS 011

- ◎ Large setting range /设定范围广
- ◎ Small size /体积小
- ◎ Simple to mount /便于安装
- ◎ High switching performance /高切换性能

FKO 011：The rmostat(normally closed)，contact breaker for regulating heaters.
FKS 011：Thermostat(normally open)，contact maker for regulating of filter fans and heat exchangers or for switching signal devised when temperature limit has been exceeded.
FKO 011：温控器(常闭)，用于调控加热器。
FKS 011：温控器(常开)，当温度超出设定值时开关装置可以启动风机或信号装置。

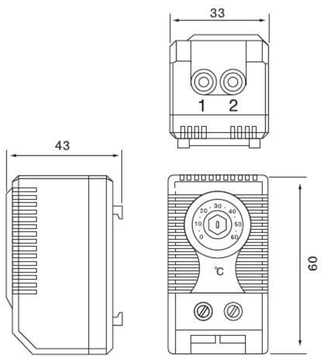

Technical Data 技术参数	
Switch temperature difference 切换温差	7K(±4K tolerance) 7K(±4K公差)
Sensor element感应元件	thermostatic bimetal恒温双金属片
Contact type接触器种类	snap-action contact突跳式接触头
Contact resistance接触电阻	<10mΩ
Service life使用寿命	>100 000 cycles >100 000周期
Max switching capacity最高切换负荷	250VAC，10(2)A
	120VAC，15(2)A
	DC 30W
EMC电磁兼容性	acc to EN 55014-1-2. EN 61000-3-2. EN 61000-3-3 符合欧盟EN 55014-1-2，EN 61000-3-2，EN 61000-3-3标准
Connection接线	2-pole terminal. clamping torque 0.5Nm max: rigid wire 2.5mm², stranded wire(with wire end ferrule)1.5mm² 2极端子台，夹紧最大扭矩0.5Nm: 钢性线 2.5mm²，钢绞线(线端带铁包)1.5mm²
Mounting安装方式	clip for 35mm DIN rail，EN50022(or for exit filter EF 118 Series) 卡槽适于DIN35导轨
Casing外壳	plastic according to UL94 V-0，light grey塑料，UL，浅灰
Dimensions 外形尺寸	60 × 33 ×43mm
Weight重量	Approx. 40g,约40克
Fitting position安装方向	Variable 任意
Operating/Storage temperature 工作/储存温度	-45 to+80℃(-4 to+176°F)/-45 to+80℃(-49 to+176°F)
Protection type保护等级	IP20

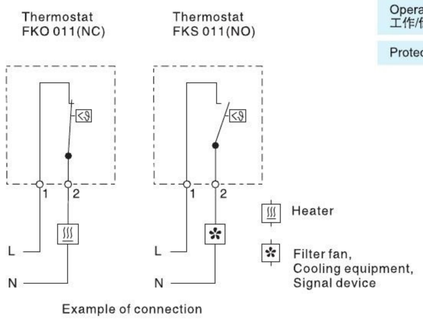

Example of connection

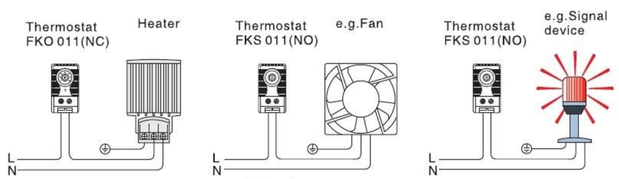

接线示意图：Example of connection

设定范围Setting range	订货代号Art.No. Contact Breaker(NC)	订货代号Art.No. Contact Macker(NO)
0 to +60℃	01140.0-00	01141.0-00
-10 to +50℃	01142.0-00	01143.0-00
+20 to +80℃	01159.0-00	01158.0-00
+32 to +140℃	01140.9-00	01141.9-00
+14 to +122°F	01142.9-00	01143.9-00
0 to +60℃	01146.9-00	01147.9-00

加热散热两用型恒温器
Dual Thermostat ZR 011

- ◎ NO and NC in one casing常开常闭一体化设计
- ◎ Separate adjustable tempe ratures温度独立控制
- ◎ High switching capacity灵敏度高
- ◎ Terminals easily accessible便于安装
- ◎ Clip fixing导轨卡装

Two thermostats in one casing：
Thermostat(contact breaker，normally closed)for regulating heaters.
Thermostat(contact maker,normally open)for regulating filter fans and heat exchangers or switching signal devices when temperature limit has been exceeded.
Heaters and cooling equipment can be switched independently from each orther with atemperature offset as opposed to the usual change—over contacts.
一盒两恒温器
恒温器(常闭)：断路器调节加热器；
恒温器(常开)：接触器调节过滤风扇，热交换或温度超过限时切换到信号装置.
相对于普通转换连接. 加热器和散热设备彼此可以独立切换。

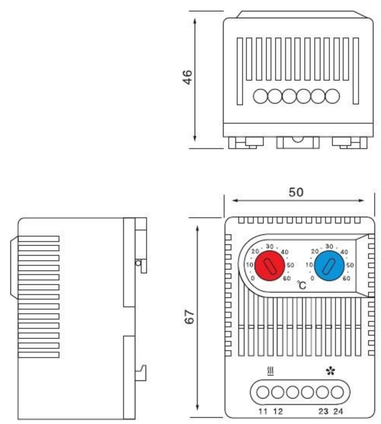

Technical Data 技术参数	
Switching temperature difference 切换温差	7K(±4K tolerance) 7K(±4K公差)
Sensor element感应元件	Thermostatic bimetal恒温双金属片
Contact type接触器种类	snap-action contact突跳式接触头
Contact resistance接触电阻	<10mΩ
Service life使用寿命	>100 000 cycles >100 000周期
Max switching capacity最大切换量	250VAC，10(2)A 120VAC，15(2)A ADC 30W
EMC电磁兼容性	acc to EN 55014-1-2. EN 61000-3-2. EN 61000-3-3 符合欧盟EN 55014-1-2，EN 61000-3-2，EN 61000-3-3标准
Connection接线	4-pole terminal. clamping torque 0.5Nm max.: 4极接线柱，最大夹紧扭矩0.5Nm.
Mounting安装方式	Clip for 35mm DIN rail，EN50022 35mm DIN导轨卡装(EN50022)
Casing外壳	Plastic according to UL94 V-0，light grey Ul94 V-0 浅灰色塑料
Dimensions尺寸	67 × 50×46mm
Weight重量	Approx. 90g 大约90g
Fitting position安装方向	Variable 任意
Operating/Storage temperature 工作/储存温度	-45 to+80℃(-49 to+176°F)
Protection type保护等级	IP20

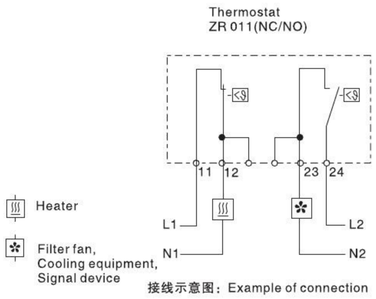

接线示意图：Example of connection

订货代号Art.No.	设定范围Setting range		设定范围Setting range	
01172.0-00	contact breaker, normally closed	0 to +60℃	contact maker, normally open	0 to +60℃
01172.0-01	contact breaker, normally closed	+32to +140°F	contact maker, normally open	+32to +140°F
01175.0-00	contact breaker, normally closed	-10 to +50℃	contact maker, normally open	+20 to +80℃
01175.0-01	contact breaker, normally closed	+14 to +122°F	contact maker, normally open	+68 to +176°F
01176.0-00*	contact maker, normally open	0 to +60℃	contact maker, normally open	0 to +60℃
01176.0-01*	contact maker, normally open	+32to +140°F	contact maker, normally open	+32to +140°F

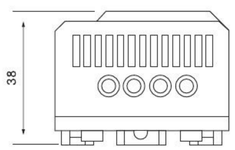

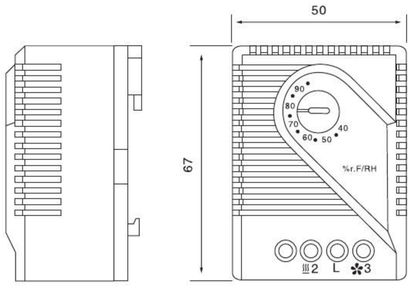

◎ Adjustable relative humidity 可调节相对湿度
◎ Change-ove r Contact 转换接触
◎ High switching capacity 转换量高
◎ Easily accessible te rminals 易接入
◎ Clip fixinq 导轨卡装

The electromechanical hygrostat MRF 012 is designed to control enclosure heaters sothat the dew point is raised when a critical relative humidity of 65%is exceeded. In thisway condensation and corrosion is effectively prevented.

电子机械式恒湿器MFR 012被设计用于控制电箱内的加热器，当湿度超过65%时湿气将会被排除. 用这种方法可有效预防水滴和生锈。

Technical Data 技术参数	
Switch difference ‘切换差异’	4%RH(±3%tolerance)4%相对湿度(±3%公差)
Permissible air velocity允许空气流速	15m/sec 15m/秒
Contact type接触器类型	change-over contact转换触点
Contact resistance接触电阻	<10mΩ
Service life使用寿命	>100 000 cycles >100 000周期
Min. switching capacity最小转换量	20V AC/DC 100mA
Max. switching capacity最大转换量	250VAC，5(1)A
	DC 20W
EMC电磁兼容性	acc to EN 55014-1-2. EN 61000-3-2. EN 61000-3-3 符合欧盟EN 55014-1-2，EN 61000-3-2，EN 61000-3-3标准
Connection 连接方式	3-pole terminal for 2.5mm。clamping torque 0.5Nm max： rigid wire 2.5mm². stranded wire(with wire end ferrule)1.5mm² 3极端子台. 线相2.5mm²，夹紧最大扭矩0.5Nm. 钢性线2.5mm² 铜绞线(线端带铁包头)1.5mm²
Mounting安装方式	clip for 35ram DIN rail，En50022 35mm DIN导轨卡装(EN50022)
Casing外壳	plastic according to UL94 V-0，light grey UL94 V-0浅灰色塑料
Dimensions尺寸	67 ×50 ×38mm
Weight重量	Approx. 60g 约60g
Fitting position安装方向	Variable 任意
Operating/Storage temperature 工作/储存温度	0 to+60℃(+32 to+140°F)/-20 to+80℃(-4 to+176°F)
Protection type保护等级	IP20
*at 50% RH	

Connection diagram

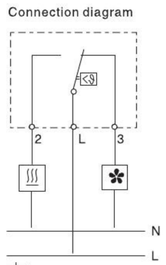

Heater

Filter fan,Cooling equipment,Signal device

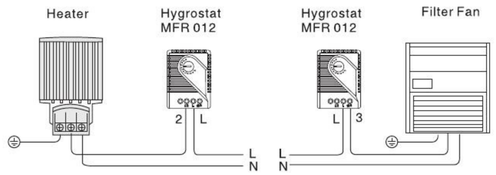

接线示意图：Example of connection

订货代号Art.No.	湿度设定范围Setting range humidity
01220.0-00	35 to 95% RH

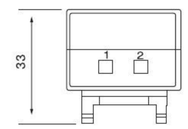

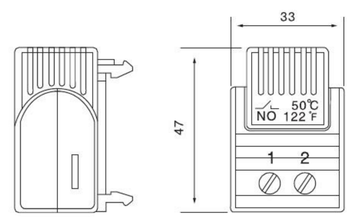

◎ Small size 体积小
◎ Default temperature settings 固定温度设置
◎ Easy to install 安装简易
◎ High switching tolerance 灵敏度高

Tamperproof(Pre-set)Thermostat FTO 01 1
Contact breaker/NC(red casing)for regulating heaters or for switching signal devices when temperature has fallen below the minimum value. The contact opens Wnen temperatu re is rlslna.
FTO 011温度固定式温控器
当温度下降到某一固定值时，FTO 011可启动加热器或开关信号装置。

Tamperproof(Pre-set)Thermostat FTS 011
Contact maker/NO(blue casing)for regulating filter fans，heat exchange rs，cooling devices or for switching signal devices when temperatu re limit has been exceeded. The contact closes when temperau re is rising.
FTS 011固定温度式温控器
当温度下降到某一固定值时，FTS 011可启动风机制冷装置。

Technical Data 技术参数	
Sensor element传感元件	Thermostatic bimetal恒温双金属片
Contact type触点类型	Snap-action contact快速动作接点
Contact resistance触点电阻	<20mΩ
Service life使用寿命	>100，000 cycles
Max Switching capacity开关最大容量	250V AC，5(1.6)A 120V AC，10(2)A DC 30W
Max inrush current开关最大电流	AC 10A
EMC电磁兼容	acc to EN 55014-1-2. EN 61000-3-2. EN 61000-3-3
Connection接线方式	2极接线端子，2.5mm2导线 2-pole terminal for 2.5mm2,torque O.8Nm max
Mounting安装方式	35mm DIN轨道 clip for 35mm DIN rail. EN60715 or for exit filter EF 118 Series
Casing外壳材料	塑料UL94标准V-0防火等级，plastic according to UL94 V-0 light grey
Dimensions外观尺寸	47×33×33mm
Weight重量	Approx. 23g 大约23g
Fitting position安装方式	Variable 任意
Operating Strage temperature操作/储存温度	-20 to+80℃(-4 to+176°F)/-45 to+80℃(-49 to+176°F)
Protection type防护等级	IP20

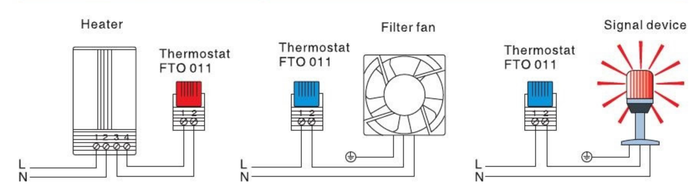

接线示意图：Example of connection

订货代号Art.No.	触点类型Contact	Switch-off temperature	Switch-no temperature
01160.0-00	Contact breaker(NC)	+15℃/ +59°F(±5K tolerance)	+5℃/ +41°F(±5K tolerance)
01160.0-01	Contact breaker(NC)	+25℃/ +77°F(±5K tolerance)	+15℃/ +59°F(±5K tolerance)
		Switch-on temperature	Switch-off temperature
01161.0-00	Contact macker(NO)	+50℃/ +122°F(±6K tolerance)	+40℃/ +104°F(±7K tolerance)
01161.0-01	Contact macker(NO)	+60℃/ +140°F(±6K tolerance)	+50℃/ +122°F(±7K tolerance)
01161.0-02	Contact macker(NO)	+35℃/ +95°F(±6K tolerance)	+25℃/ +77°F(±7K tolerance)

电子式继电器
Electronic Relay SM 010 (24VDC+48VDC)

- ◎ High DC switching capacity高直流分断能力
- ◎ Variety of applications应用广泛
- ◎ Compact design紧凑型设计
- ◎ Simple connection接线简便
- ◎ Clip fixing导轨安装

Electronic relay for switching DC appliances with high switching capacity,A separate conventional switch contact is used as controller (e.g temperature regulator,humidity regulator)The electronic relay is available in 24VDC and 48VDC versions.

该直流电子式继电器具有较高的直流分断能力，有24VDC和48VDC两种电压可选。

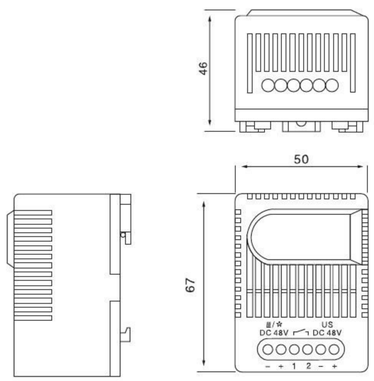

Technical Data 技术参数	
Contact type触点类型	接触开关,常开Contact maker,normally open(Relay/MOSFET)
Contact resistance触点电阻	<10mΩ
Service life使用寿命	>100，000 cycles
EMC电磁兼容性	acc. to EN 55014-1-2. EN 61000-3-2. EN 61000-3-3
Connection接线方式	6极端子，2.5mm²导线 6-pole terminal，clamping torque 0.5Nm max.: rigid wire 2.5mm²
Mounting安装方式	35mm DIN轨道 clip for 35mm DIN rail. EN60715 or for exit filter EF 118 Series
Casing外壳材料	塑料UL94标准V-0防火等级，plastic according to uL94 V-0，light grey
Dimensions外观尺寸	67×50×46mm
Weight重量	Approx. 85g 约85g
Fitting position安装方式	variable 任意
Operating Strage temperature操作/储存温度	-20 to+80℃(-4 to+176°F)
Protection type防护等级	IP20

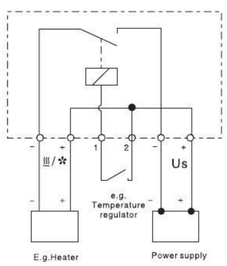

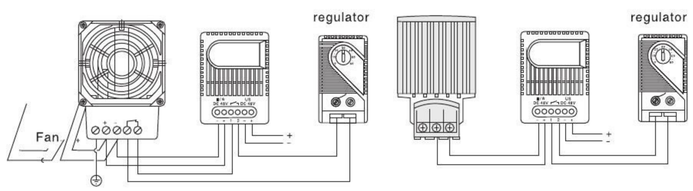

接线示意图：Example of connection

订货代号Art.No.	工作电压Operating voltage	最大开关容量Max. Switching capacity
01001.0-00	24VDC(20-28VDC)	28VDC 16A
01000.0-00	48VDC(38-56VDC)	56VDC 16A

电子式温控器 FZK011
Mechanical Thermostat FZK 011

- ◎ Adjustable temperature 相对温度可调节
- ◎ High switching capacity 切换能力高
- ◎ Terminals easily accessible 接线方便
- ◎ Clip fixing导轨安装
- ◎ Change-over contact 切换接触器

The mechanical thermostat is used for controlling heating and cooling equipment，filter fans or signal devices. The thermostat registers the surrounding ai r and can switch both inductive and resistive loads via snap-action contact.

电子式恒温器是用于控制加热器和冷风机或信号装置。

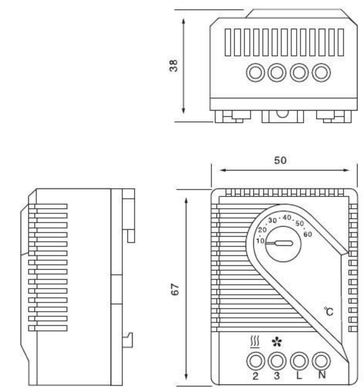

Technical Data 技术参数	
Switch temperature difference开关温差	4K(±1.5K tolerance)
Sensor element传感元件	感温材料Thermostatic bimetal NTC
Contact type触点类型	快速动作接点snap-action contact
Contact resistance触点电阻	<10mΩ
Service life使用寿命	>100，000 cycles >100，000周期
Max Switching capacity NC 开关最大容量 NC	250V AC，10(4)A
Max Switching capacity. NO 开关最大容量NO	250V AC，5(2)A
EMC电磁兼容性	Acc to EN 55014-1-2. EN 61000-3-2. EN 61000-3-3
Connection接线方式	4极接线端子2.5mm²导线 4-pole terminal,clamping torque 0.5Nm max.:rigid。wire 2.5mm² stranded wire(with wire end ferrule)1.5mm²
Mounting安装方式	35mm DIN轨道 clip for 35mm DIN rail. EN60715 or for exit filter EF 118 Series
Casing外壳材料	塑料UL94标准V-0防火等级，plastic according to UL94 V-0 light grey
Dimensions外观尺寸	67×50×38mm
Weight重量	Approx. 100g 约100千克
Fitting position安装方式	Variable 任意
Operating Strage temperature操作/储存温度	-20-60。C
Protection type防护等级	IP20

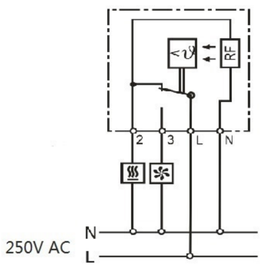

接线示意图

Connecting terminal "N" (RF heating resistor) causes thermal feedback to work and so reduces the switch temperature difference to approx.0.5k

连接端子N(RF加热电阻器)可反馈热量信号，从而减少温差大约0.5K

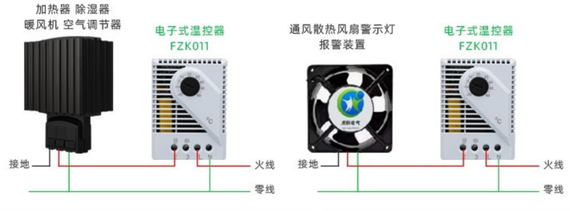

订货代号Art.No.	操作电压Operating voltage	温度设定范围Setting range temperature
01170.0-00	230VAC	-20to+60℃
01170.0-01	230VAC	+40 to +140°F

电子式温控器 ET011
Electronic Thermostat ET 011 (24VDC)

- ◎ High DC breaking capacity高直流分断能力
- ◎ Low hysteresis低滞后
- ◎ Adjustable temperature可调整温度
- ◎ Change—over contact切换接点
- ◎ Clip fixing导轨安装

Electronic thermostat for regulating high performance DC 24V equipment. Heating or cooling appliances as well as signal devices can be switched via the potential free change-over contact. In comparison to mechanical thermostats. the ET 011 has a low hysteresis making the switching point and setting accu racy more precise.

直流24V高性能电子温控器，可以调控加热器散热以及信号装置。与机械式温控器相比ET011有低滞后性，使切换点和设置精度更加精确。

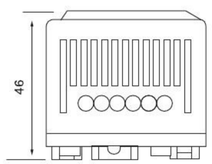

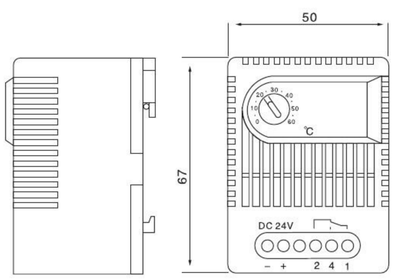

Technical Data 技术参数	
Switch temperature difference开关温差	Approx.3K
Sensor element传感元件	PTC
Contact type触点类型	切换型Change-over
Contact resistance触点电阻	<10mΩ
Service life使用寿命	>100，000 cycles >100，000周期
Max Switching capacity 开关最大容量	28VDC，16A
EMC电磁兼容性	Acc to EN 55014-1-2. EN 61000-3-2. EN 61000-3-3
Connection接线方式	5极接线端子2.5mm²导线 5-pole terminal,clamping torque 0.5Nm max.:rigid。wire 2.5mm² stranded wire(with wire end ferrule)1.5mm²
Mounting安装方式	35mm DIN轨道 clip for 35mm DIN rail. EN60715 or for exit filter EF 118 Series
Casing外壳材料	塑料UL94标准V-0防火等级，plastic according to UL94 V-0 light grey
Dimensions外观尺寸	67×50×46mm
Weight重量	Approx. 80g 约80克
Fitting position安装方向	Variable 任意
Operating Storage temperature操作/储存温度	0 to+80℃(32 to+140°F)/-45 to+80℃(-49 to+176°F)
Protection type防护等级	IP20

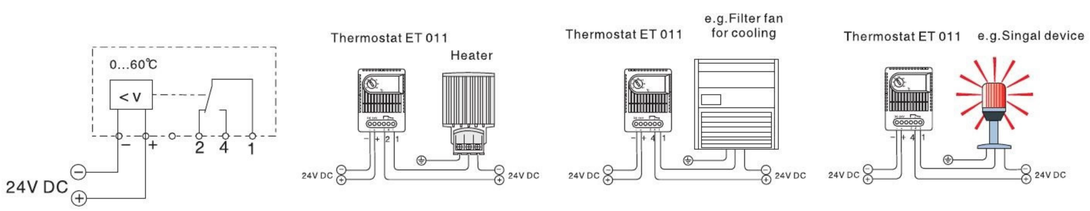

接线示意图：Example of connection

订货代号Art.No.	操作电压Operating voltage	温度设定范围Setting range temperature
01190.0-00	24VDC(20-28VDC)	0 to +60℃

电子式温度控制器
Electronic Hygrothermostat ETF012

- ◎ Temperature and humidity adjustable 温度和湿度都可调节
- ◎ Optical operating display(LED) LED显示
- ◎ Hlgh switching capacity 高分断能力
- ◎ Clip fixing 导轨安装

The electronic hygrotherm senses the ambient temperature and relative humidity in anenclosure with electric/electronic component，and turns on a heater(or alternatively, a fan)ateither set point. helping prevent the formation of condensation in the enclosure. The LEDintegrated in the adiustment knob on the active controller is lit when the connected deviceIS in operation.

电子恒温器可以感应电器箱内的温度和相对湿度，在设置点打开加热器(或替换为风扇)，防止箱内水珠生成，连接装置工作时调节旋钮处的LED屏会亮。

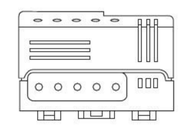

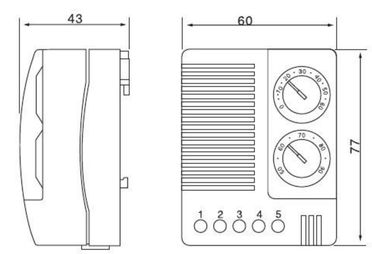

Technical Data 技术参数	
Switch difference(temperature) 调节量(温度)	2K(±1K tolerance)at 25℃/77°F(50%RH) 2K(±1%公差)在25℃/77°F(50%相对湿度)
Switch difference(humidity)调节量(湿度)	4%RH(1%tolerance)at 25℃/77°F(50%RH) 4%相对湿度(±1%公差)在25℃/77°F(50%相对湿度)
Reaction time(humidity)反应时间(湿度)	Approx.5 sec. 约5秒
Contact type接触方式	Change-over contact(relay)转换接触(继电器)
Contact resistance接触阻抗	<10mΩ
Service life使用寿命	NC:>50. 000 cycles NC>50000周期
	NO:>100，000 cycles NO>10000周期
Max. switching capacity(Relay output) 最大切换能力(继电器输出)	NC:240VAC，6(1)A
	NO:240VAC，8(1.6)A
	NC:120VAC，6(1)A
	NO:120VAC. 8(1.6)A
	24VDC.4A
EMC电磁兼容性	Acc.to EN 55014-1-2，EN 61000-3-2.EN 61000-3-3
Optical indicator光学指示器	LED
Connection连接方式	5-pole terminal.clamping torque 0.5Nm max.: 5极端子台，夹紧最大扭矩0.5Nm，
	Rigid wire 2.5mm² 钢性线mm²
	Stranded wire(with wire end ferrule)1.5mm² 钢绞线(线端带铁包头)1.5mm²
Mounting安装方式	Clip for 35mm DIN rail，En50022 35mm DIN导轨卡装(EN50022)
Casing外壳	Plastic according to UL94 V-0,light grey，UL94 V-0浅灰色塑料
Dimensions尺寸	77×60×43mm
Weight重量	Approx.0.20kg 约0.20kg
Fitting position安装方向	Vertical任意
Operating/Storage temperature 工作/储存温度	0 to+60℃(+32 to+140°F)/-20 to+800C(-4 to+176°F)
Protection type保护等级	IP20

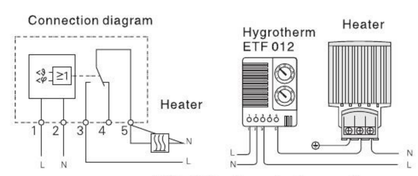

接线示意图：Example of connection

订货代号Art.No.	操作电压 Operating voltage	温度设定范围 Setting range temperature	湿度设定范围 Setting range humidity
01230.0-00	230VAC, 50/60Hz	0 to +60℃	50 to 90% RH
01230.9-00	120VAC, 50/60Hz	+32 to +140°F	50 to 90% RH
01230.9-01	120VAC, 50/60Hz	0 to +60℃	50 to 90% RH

电子式恒湿器EFR 012

Electronic hygrostat EFR012

- Adjustable and pre-set relative humidity
  可调并可预设相对湿度
- Optical operating display(LED)　光学工作显示器(LED)
- High switching capacity　高切换性能
- Clip fixing　导轨卡装
- Temperature-compensated　温度补偿

The electronic hygrostat senses the relative humidity in an enclosure with electric / electronic components, and turns on a heater at the set point, helping prevent the formation of condensation in the enclosure.The LED intergrated in the adjustment knob is lit when the connected heater is in operation.

电子恒湿器可以感应电器箱内的相对湿度，在设置点打开加热器，防止箱内水珠生成。加热器工作时调节旋钮处的LED屏会亮。

Technical Data 技术参数

Switching difference 切换差异	5% RH(±1% RH tolerance) at 25% °C / 77 °F (50% RH) 5% 相对湿度 (±1% 公差)在 25° C/77° F (50%相对湿度)
Reaction time 反应时间	approx.5 sec. 约5秒
Contact type 接触方式	Change-over contact (relay) 转换接触（继电器）
Service life 服务寿命	>50 000 cycles　>50 000 周期
Max. switching capacity (relay output) 最大切换能力（继电器输出）	240VAC, 8%1.6% A 120VAC, 8 (1.6)A 24VDC, 4A
EMC 电磁兼容性	Acc. to EN 55014-1-2, EN 61000-3-2, EN 61000-3-3 符合欧盟 EN 55014-1-2, EN 61000-3-2, EN 61000-3-3标准
Optical indicator 光学指示器	LED
Connection 连接方式	5-pole terminal, clamping torque 0.5Nm max.: rigid wire 2.5mm², stranded wire(with wire end ferrule)1.5mm² 5极端子台，夹紧最大扭矩0.5Nm，刚性线 2.5mm²，钢绞线(线端带铁包头)1.5mm²
Mounting 安装方式	clip for 35mm DIN rail, En50022 / 35mm DIN导轨卡装（EN50022）
Casing 外壳	plastic according to UL94 V-0, light gray　UL94 V-0浅灰色塑料
Dimensions 尺寸	64.5 x 42 x 38mm
Weight 重量	approx. 70g　约70g
Fitting position 安装位置	Vertical 垂直安装
Operating/storage temperature 适用温度	0 to +60°C(+32 to +140°F) / -20 to +70°C(-4 to +158°F)
Max.Storage Humidity 最大储存湿度	90% RH (non-condensation) 90%相对湿度（无冷凝）
Protection class 保护等级	IP20

Art.No. 型号	Operating voltage 工作电压	Setting range 设置范围
REFR01245.0-00	230VAC, 50/60Hz	40 to 90% RH
REFR01246.0-00	230VAC, 50/60Hz	65% RH pre-set
REFR01245.9-00	120VAC, 50/60Hz	40 to 90% RH
REFR01246.9-00	120VAC, 50/60Hz	65% RH pre-set

Technical Drawing 技术图

Example of connection

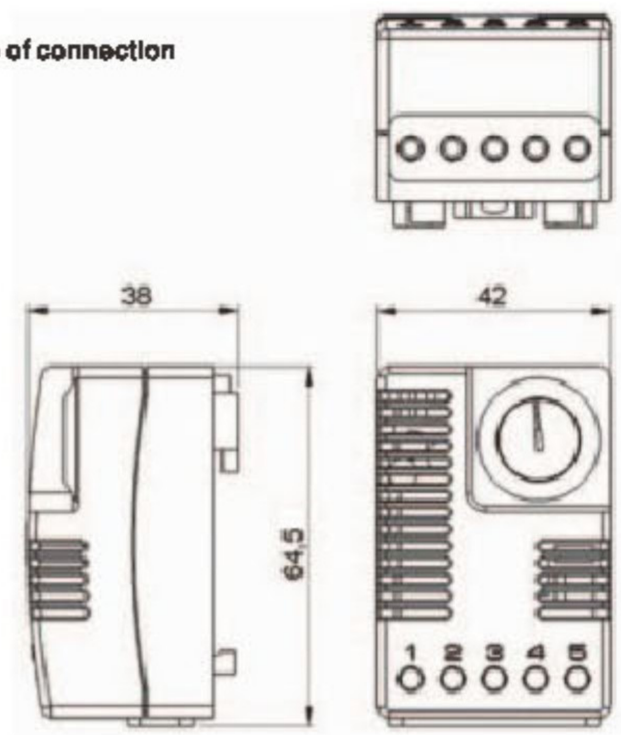

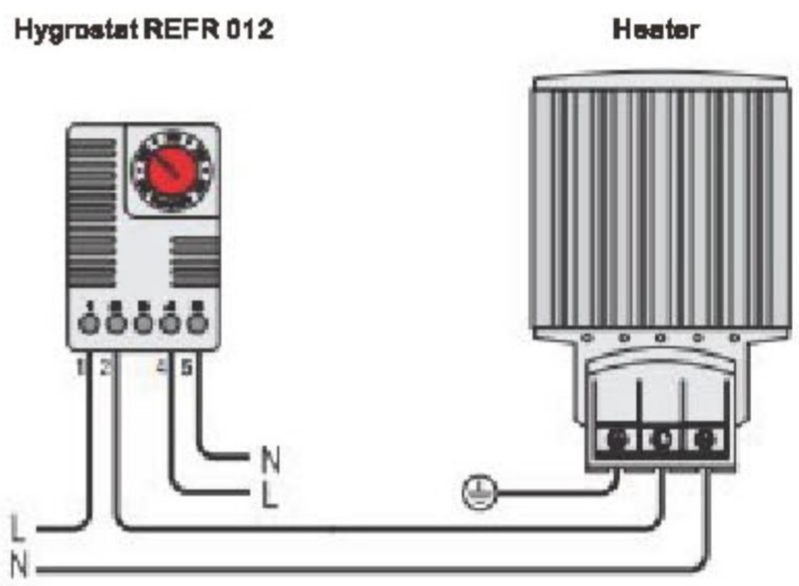

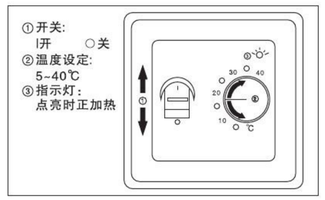

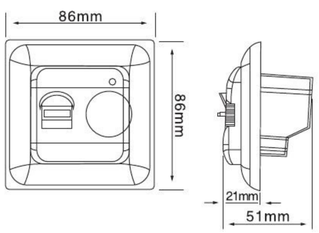

Introduction

The RTC70. xx iS used for 2–position contr01 with on/off output for the control the temperature by means of an NTC sensor placed externally or internally in the thermostat. the thermostat acquires the room temperatu re with its built–in sensor or floor sensor. and the heating contact will close when the room temperatu re falls below the selected setpoint.

Application

For the control of warm–water(floor)heating systems and direct electric heating systems used in Commercial buildings,Residential buildings,Light in dustrial buildings

Features功能特性

LED in dicator is light when heating is onwith manual switch and knob for easy ope ration On / off control output for heating device
当手动打开加热开关后，LED指示灯亮。旋钮是为了方便控制加热装置输出的开与关。

Technical Data 技术参数

电压：AC230V	Voltage：AC230V
功耗：5W	Power consumption：5W
温控范围：4℃～45℃	Setting range：4℃～45℃
温度开关偏差：±0. 5K	Switching differential：±0. 5K
环境温差：-5℃～50℃	Ambient temperature：–5℃--50℃
外壳防护：IP20	Protective housing：IP20
外壳材质：热塑性橡胶，NTC探头	Housing material:self–exting uishing PC Floor sensor：rubber–thermoplastic NTC sensor
外置传感器：线长度为3m	Cable length iS 3m

SG-2000 Series of Mechanical Thermostat
SG-2000机械式温控器系列

Technical Data 技术参数

应用：适用于中央空调	Application：control of central air conditioner or heating
温度控制范围：10℃~30℃	Temperature control range：10℃～30℃
工作电压：220V~/50Hz	Work voltage：220V～/50HZ
最大负载：10A	Max load：10A

Technical Drawing 技术制图

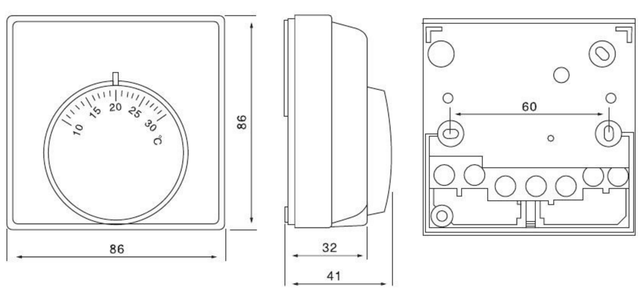

Use instructions Room thermostat

Bimetallic room thermostat for heating and air–conditioning installations Thermal，electrical and mechanical features Breaking capacity on opening contact，10A–250V A. C. (ohmic load) Differential：0.5K

Temperature's scale adjustment

After almost two days from the installation，to obtain a precise scale adjustment，measu re the room tempe rature with a reference thermomete r，placed aside the thermostat，holding the shagreened part of the knob，turn the index with a coin，to reach the same value of the thermometer，We suggest to install the equipmentat aboutl.5mt frOm the floor and far from any heat source.

安装后要想达到准确的范围调控，先放一个温度计测量室内温度以作参考。然后调节旋钮把指针调到和温度计相同的值。我们建议把温控器安装在离地面或其他热源大约1. 5米处。

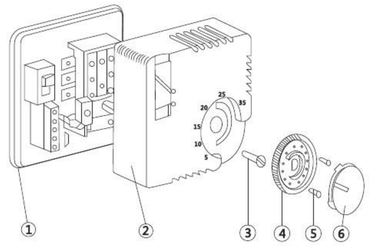

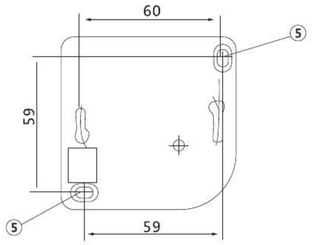

Pattern

1.Base
2.Cover
3.Cover screw
4.Knob Lockpins，The lock pins for scale limitation ’
5.are to be derached from the base of the thermostat. They are Located on the fixing holes. 、
6.Index：The fixing of the room thermostat can be done directly on the wall by screws and nags.

B1–With N. C. contacr.
B2–With N. C. contact and 0N–0FF switch
B3–With SPDT contact(change–over)
B4–With change–over contact(SPDT)and ON–OFF switch
B7–With normally closed contact on"Winter"and normally open contact on “Summer"plus “Summer–Winter"selector–Switch

Important

1.Accelerating resistance with voitage to 220—250V a. c.
2.This thermostat is provided with an accelerating resistance which mustbe absolutely connected in order to obtain the regulation s performances
3.The terminal 4has thus to be connected to the neutral according to the diagram shown on the cover.
4.This connection allows also the working of the pilot lamp which indicates the operation of the heating.

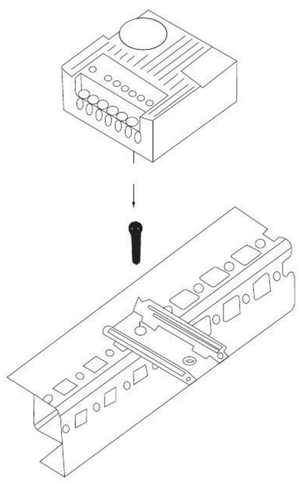

Inner temperature controller for switchgear cabinet 开关柜内部温度控制器SK3110.000

Especially used for controlling fan filter, heater and exchanger. also could be monitoring the electric cabinetinner temperature when working as signal arcuser.
主要用于控制风机、加热器和转换器，也可以用于监控配电柜内的温度。

Technical Data 技术参数

Make bimetal sensor as heat sensitivity set to feedback of heat.
Contact point scheme: single switch over contact point as instant switch component allowed load of contact point
KL5-3 ACl0(4)A
DC=30W KL5-4(冷却Cooling)
AC5(4)DA DC=30W
(D)=sensitivity load at COS Ø=0. 6

- ◆ Adjusting range： -20℃ to+60℃
- ◆ Weight：105 gappr
- ◆ Size：70×70×33.5mm
- ◆ Switch discrepancy" 1 K±0.8K
- ◆ Voltage scope is wide，any type could be used from 24V to 230V
- ◆ Time-saving connection. terminal block could be installed with screw from outside
- ◆ Easy installation. could be installed to 35mm din rail vertically or horizontally. according to En50022. it could be clipped to NS/35-ES cabinet profile its accessory adapter.

温度调节范围:-20℃到+60℃
重量：105克
外观尺寸：70×70×33. 5mm

48V 60V N	24V N			(L1*) L	(L2*) 250V N	115V N
1	2	3	4	5	6	7

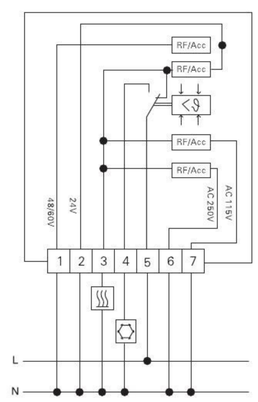

◎ High degree of protection 保护等级高
◎ Easy to insta 易于安装

① It has become more and more important to provide a protected enclosure environment for valuable and crucial electrical and electronic components.
② In a tightly closed enclosure. pressure differentials can occur during extreme temperatu re variations. such as day/night operation.
③ When this occurs，the risk of dust and humidity being absorbed into the control panel increases dramatically.
④ The specially designed pressure compensation plug DA 084 permits a controlled change in pressure.
⑤ It can be installed easily in any enclosure. Because of the pressure compensation plug's high degree of protection(IP45), the protection type of the enclosure will not be affected.
① 该装置为电气配电柜，提供一个安全的有气密保护性的环境。
② 密闭的箱子当中，因为昼夜交替时温度的变化而引起箱内气压变化。
③ 避免灰尘及湿气的吸入。
④ DA084气压密装置允许气压在允许的范围内发生变化。
⑤ 因为气密装置有IP45高度保护能力，所以当我们把它安装在任何箱子里，都不会影响箱体的功能。

Technical Data 技术参数

Mounting安装方式	PG29 thread with union nut
Material材料	UI94标准的材料V-0防火等级plaslic according to UL94 V-0
Air interface与空气的接触面积	Approx. 7cm² 约7cm²
Dimensions外观尺寸	Φ65.5×30.5mm
Fitting position安装方向	任意variable
Operating/Storage temperature 工作/储存温度	-45 to+700℃(-49 to+158°F)

Installation 安装

Make cut-out Ø37^{+1} mm in enclosure wall and mount pressure compensation device with nut. Please make sure that the sealing gasket is put in place on the outer side panel of the enclosure. For optimal pressure compensation we recommend to use two devices on opposite sides towards the top of the enclosure.
在箱壁上开一个直径为37mm的孔，并装上用螺母的压力补偿装置，请确保密封圈放在箱板的外侧，为了达到最佳密封效果，建议在箱子两侧各安装一个。

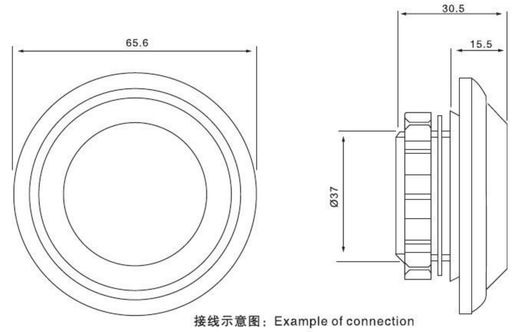

接线示意图：Example of connection

订货代号Art.No.	型号Model	保护等级Protection type	包装Packing unit	重量Weight(approx.)
08400.0-00	without gasket不带橡胶垫	IP45	2 pieces	62g (31g/piece)
08400.0-04	with gasket带橡胶垫	IP45	2 pieces	62g (31g/piece)

小型半导体加热器RC016系列8W,10W,13W
Small Semiconductor Heater RC 016 Series 8W,10W, 13W

◎ Temperature limiting温度限定
◎ Wide voltage range电压范围宽
◎ Dynamic heating up高效加热
◎ Energy saving节能
◎ Compact轻巧

These small heaters are designed to prevent condensation and to ensure a minimum operating temperatu re in small enclosures.
小型加热器主要用于开关箱，可预防产生凝露。

Technical Data 技术参数	
Operating voltage工作电压	120–240V交流电/直流电(最低110V,最高265V)
Heating element加热原件	PTC resistor,self regulating and temperature limiting 正温度系数电阻器，自动调节和温度限制
Heater body加热体	aluminium, anodised阳极处理铝型材
Mounting安装方式	screw fixing 螺丝安装
Fitting position安装方向	Vertical任意
Operating/Storage temperature 工作/储存温度	–45 to+70℃(–49 to+158°F)
Protection type/Protection class 防护类型/防护等级	IP32/II(双绝缘)
Note注意	其他电压的要求

* Operating with voltages below 140V AC/DC reduces heating performance by approx. 10%
* 工作电压低于140V AC/DC时，加热性能降低约10%

Eaxmple of connection

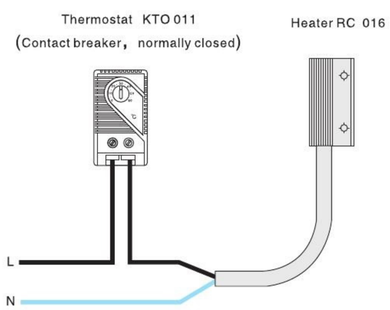

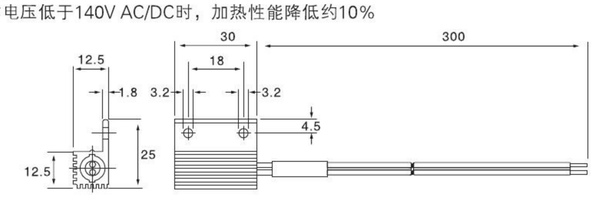

Art.No.01602.0–00:Connection 2 x AWG 18 Stranded wire

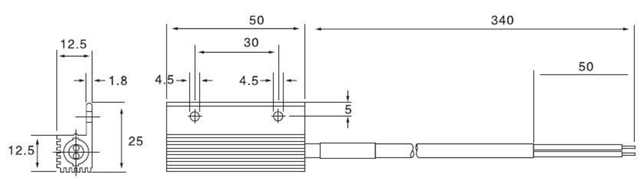

Art.No.01609.0–00:Connection 2 x AWG 22 Stranded cable(silicone)

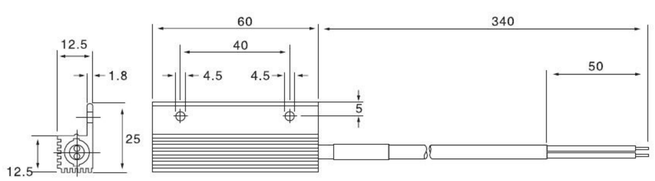

Art.No.01610.0–00:Connection 2 x AWG 22 Stranded cable(silicone)

订货代号 Art.No.	功率 Heating capacity	最大电流 Inrush current max.	表面温度 Surface temperature(approx.)	接线方式 Connection	重量 Weight(approx.)
01602.0–00	8W	2.0A	150℃	2 x AWG 18 stranded wire	20g
01609.0–00	10W	2.5A	155℃	2 x AWG 22 stranded cable(silicone)	30g
01610.0–00	13W	3.0A	170℃	2 x AWG 22 stranded cable(silicone)	40g

* at 20℃(68°F)ambient temperature

小型半导体加热器HGK 047系列10W-30W
Small Semiconductor Heater HGK 047 Series 10W to 30W

◎ Dynamic heating up高效加热
◎ Energy saving节能
◎ Wide voltage range电压范围宽
◎ Temperature limiting温度限定
◎ Clip fixing导轨安装

The heaters are used in enclosu res where condensation is to be prevented or the temperatu re may not fall below a minimum value. In this way corrosion is avoided and an even temperature is ensured.
加热器主要用于开关箱，可避免产生凝露，预防温度降至零下或降至最小需求值时，用此方法可避免生锈，确保箱内温度恒定。

Technical Data 技术参数	
发热元件Heating element	PTC发热体，自我调节和温度控制 PTC resistor,serf regulating and temperature limiting
发热体Heater body	阳极处理挤压铝型材extruded aluminium profile，anodised
安装方式Mounting	35mm DIN轨道，EN 50022clip for 35mm DIN rail，EN 6071 5
安装方向Fitting position	垂直方向vertical
Operating/Storage temperature 工作/储存温度	–20 to+70℃(–4 to+158°F)
Protection type保护等级	I P54/(earthed/接地)
Operating voliqge工作电压	120–240V交流电(最低110V, 最高265V)

Eaxmple of connection

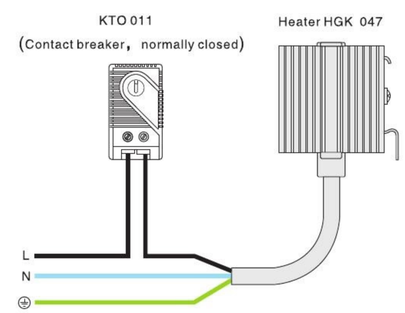

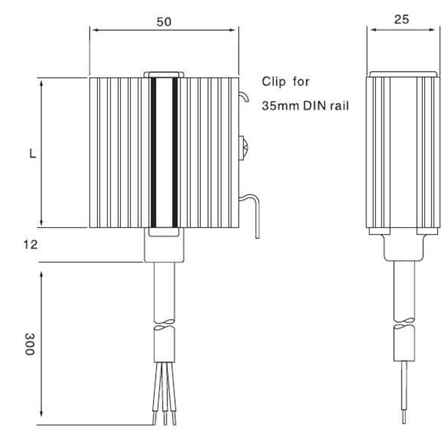

订货代号 Art.No.	操作电压 Operating voltage	功率 Heating capacity	电流最大值 Inrush current max.	长度(L) Length(L)	重量 Weight(approx.)	连接方式Connection
04700.0–00	120–240V AC/DC	10W	1.0A	50mm	0.10kg	3 x 0.5mm² x 300mm sheathed cable(silicone)护套电缆
04701.0–00	120–240V AC/DC	20W	2.5A	60mm	0.20kg	3 x 0.5mm² x 300mm sheathed cable(silicone)护套电缆
04702.0–00	120–240V AC/DC	30W	3.0A	70mm	0.20kg	3 x 0.5mm² x 300mm sheathed cable(silicone)护套电缆
04700.9–00	110–120V AC/DC	10W	1.0A	50mm	0.10kg	3 x AWG 20 x 300mm sheathed cable护套电缆
04701.9–00	110–120V AC/DC	20W	1.5A	70mm	0.20kg	3 x AWG 20 x 300mm sheathed cable护套电缆
04702.9–00	110–120V AC/DC	30W	1.5A	100mm	0.20kg	3 x AWG 20 x 300mm sheathed cable护套电缆

1)at 20℃(68°F)ambient temperature
2)(min. 110V, max 265V)Operating with voltages below 140V AC/DC reduces heating performance by approx. 10%

半导体加热器HG 140系列15W-150W
Semiconductor Heater HG 140 Series 15W to 150W

- ◎ Pressure clamp connectors钳压连接
- ◎ Dynamic heating up高效加热
- ◎ Wide voltage range电压范围宽
- ◎ Temperature limiting温度限定
- ◎ Energy saving节能
- ◎ Clip fixing导轨卡装
- ◎ Quick installation快速安装

These heaters are used in enclosures where damage from condensation must be prevented，or where the temperature may not fall below a minimum value.The aluminium profile heater body design has a chimney effect and distributes the heat evenly. The pressure clamp connectors save time and simplify installation.

加热器用于机箱内，防止产生水珠或温度低于最小需求值，避免生锈腐蚀。铝制外壳采用筒式设计，能够均匀的分布热量。钳式卡槽接线方式，简化安装，节约时间。

Technical Data 技术参数	
Operating voltage 工作电压	120–240VAC/DC'(min.110V，max.265V)
Heating element 加热原件	PTC resistor. self regulating and temperature limiting PTC电阻，自动调节，限制温度
Heater body 散热体	Extruded aluminium profile，anodised阳极挤压铝型材
Connection 连接方式	3 pressure clamps for stranded wire 0.5–1.5mm (with wire end ferrule)and rigid wire 0.5–2.5mm 3个钳式卡槽，适用于标准电线1.5–1.5mm (带电线末端套管)和硬线0.5–2.5mm
Connection casing 连接外壳	Plastic accordingto UL94V–0，black适用于UL94V—0黑色塑料
Mounting安装方式	Clip for 35mm DIN rail，EN 50022 35mm DIN导轨卡装(EN 50022)
FiRing position安装方向	Vertical垂直
Operating/Storage temperature 工作/储存温度	–45 to+70℃(–49 to+158°F)
Protection type/Protection class 防护类型/防护等级	IP20/I(earthed/接地)

*Operating with voltages below 140V AC/DC reduces heating performance by approx. 1 0%

*工作电压低于140AC/DC，加热性能降低10%左右。

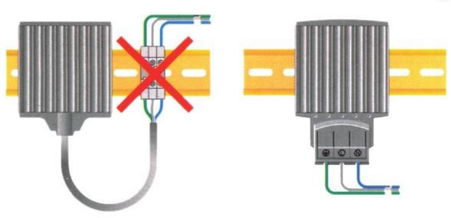

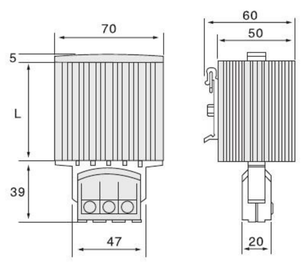

订货代号Art.No.	功率Heating capacity	最大电流Inrush current max.	长度Length(L)	重量Weight(approx.)
14000.0–00	15W	1.5A	65mm	0.30kg
14001.0–00	30W	3.0A	65mm	0.30kg
14003.0–00	45W	3.5A	65mm	0.30kg
14005.0–00	60W	2.5A	140mm	0.40kg
14006.0–00	75W	4.0A	140mm	0.50kg
14007.0–00	100W	4.5A	140mm	0.50kg
14008.0–00	150W	9.0A	220mm	0.70kg

* at 20℃(68°F)ambient temperature

风机加热器
Space-saving Fan Heater HV 031/HVL 031 Series 100W To 400W

- ◎ Compact紧凑型
- ◎ Flat design扁平设计
- ◎ High air through–flow空气流动性好
- ◎ Temperature safety cut–out温度安全保护开关
- ◎ Clip fixing导轨安装

The compact high–performance fan heater prevents formation of condensation in control or switch systems and provides an evenly distributed interior air temperature in enclosures.This fan heater is available without fan(HV 031)as well as with fan (HVL 031).

紧凑型高性能风机加热器可预防凝露的形成，该产品有带风机式加热器，型号为HVL031,也有不带风机式的，型号为HV031。

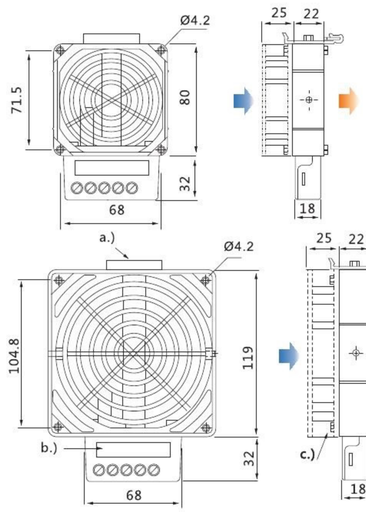

a.)Clip b.) Type plate c.) Axial fan d.) Air direction

Technical Data 技术参数	
HV 031	Heater without fan(fan mounting kit included) 不带风扇的加热器(含风扇安装套件)
HVL 031	Heater with fan带风扇的加热器
Heating element加热元件	high performance Cartridge高性能发热管
Temperature safety cut–out 安全温度切断	To protect against overheating in case of fan failure 防止风扇故障致使加热器过热
Heater body加热体	Die–cast alumininm(glass bead blasted)铝合金铸体
Connection接线	3–pole screw connector 2.5mm². clamping torque0.8Nm max 3极螺丝连接器2.5mm²，最大扭矩0.8Nm
Connection casing连接外壳	Plastic according to UL94 V–0，black UL94V–0黑色塑料
Mounting安装方式	Clip for 35mm DIN rail，EN 50022 导轨卡装35mm，EN50022
Fitting position安装方向	Horizontal水平
Operating/Storage temperature 工作/存储温度	–45 to+70℃(–49to+1 58°F)
Protection type/protection class 防护类型/防护等级	IP20/I(earted/接地)&IP54
Approvals	E187294(VDE: 230VAC only)仅限HVL 031
HVL 031 only轴承式轴流风扇	AxiaL fan. ball bearing气流(见下表)
Airflow see table使用寿命	50 000 at 25℃
Connection(axial fan)连线风扇	2–pole screw connector 2.5mm2(L2/N2)两极螺丝连接2.5mm2(L2/N2)

Import!Heater may only be operated together with fan.Danger of overherheating!
注意！ 加热器只能与风扇一起工作,过热危险!

订货代号Art.No.HV 031 230VAC.50/60Hz	订货代号Art.No.HV 031 120VAC.50/60Hz	功率 Heating capacity	尺寸 Dimensions	重量 Weight(approx.)
03100.0–00	03100.9–00	100W	80×112×22mm	0.40kg
03101.0–00	03101.9–00	150W	80×112×22mm	0.40kg
03110.0–00	03110.9–00	200W	119×151×22mm	0.50kg
03111.0–00	03111.9–00	300W	119×151×22mm	0.50kg
03112.0–00	03112.9–00	400W	119×151×22mm	0.50kg

订货代号Art.No.HV 031 230VAC.50/60Hz	订货代号Art.No.HV 031 120VAC.50/60Hz	功率 Heating capacity	最小风流量 Airflow min.,free flow	尺寸 Dimensions	重量 Weight(approx.)
03102.0–00	03102.9–00	100W	35m³/h	80×112×47mm	0.60kg
03103.0–00	03103.9–00	150W	35m³/h	80×112×47mm	0.60kg
03113.0–00	03113.9–00	200W	108m³/h	119×151×47mm	0.90kg
03114.0–00	03114.9–00	300W	108m³/h	119×151×47mm	0.90kg
03115.0–00	03115.9–00	400W	108m³/h	119×151×47mm	0.90kg

半导体风机加热器CR027
Semiconductor Fan Heater Cr027 UP To 650W

- ◎ Compact heater紧凑型加热器
- ◎ Heating capacity adjusts to ambient temperature加热功率可调
- ◎ Adjustable temperature range温度范围可调
- ◎ Clip fixing导轨安装
- ◎ Optical indicator信号指示
- ◎ Temperature safety cut-out温度安全保护

Semiconductor fan heaters prevent the formartion of condensation and ensure en even temperature in switch and control equipment,The bulit-in regulator is used to set the desired temperature.

半号体式风机加热器主要用于配电柜体内，防止产生凝露，一体设计的调节器用于调整温度的变化。

Technical Data 技术参数	
发热体Heater body	PTC resistor,self regulating and temperature limiting
温度保护 Temperature safety cut-out	过热保护to protect against overheating in case of fan failure
滚珠风机Axial fan，ball bearing	风量见如下图表airflow see table service life 50，000h at 25℃(77°F)
接线方式Connection	两级螺丝连接器线粗2.5mm² 最大扭力0.8Nm 2-pole clamp max. 2.5mm²clamping screw torque 0.8Nm max
外壳材料Casing	浅灰色塑料，UL94V-0标准，V-0防火等级 plastic acco~ing to UL94 V-0，light grey
信号指示Optical indicator	恒温控制灯thermostat control lamp
安装方式Mounting	35mmDIN导轨安装，clip for 35mm DIN rail，EN 6071 5
安装方向Fitting position	垂直vertical
外观尺寸Dimensions	100×128×165mm
操作/储存环境 Operating/sforage temperature	-45 to+ 90℃(-49 to+ 194°F)
防护等级 Protection type/Protection class	IP20/II(double insulated)

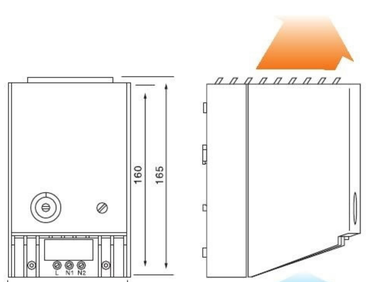

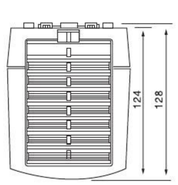

加热功率
Heating capacity/Ambient temperature diagram CR 027 (50Hz)

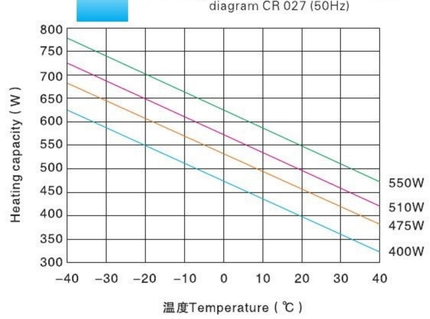

加热功率
Heating capacity/Ambient temperature diagram CR 027 (60Hz)

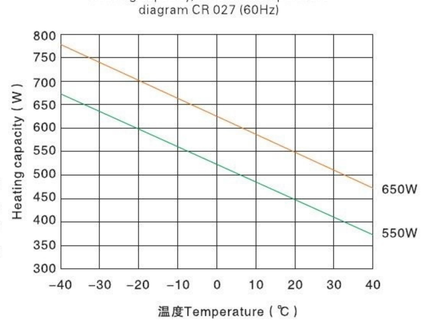

订货代号 Art.No.	工作电压 Operating voltage	功率(50Hz) Heating capacity	功率(60Hz) Heating capacity	最大电流 Inrush current max.	风量 Airflow, free flow	温度范围 Setting range Temp. regulator	重量 Weight(approx)
02700.0-00	220-240VAC, 50/60Hz	475W	550W	11.0A	35M³/h	0 to +60℃	0.90kg
02701.0-00	220-240VAC, 50/60Hz	550W	650W	13.0A	45M³/h	0 to +60℃	1.10kg
02700.9-00	100-120VAC, 50/60Hz	400W	550W	14.0A	35M³/h	+32 to +140°F	0.90kg
02701.9-00	100-120VAC, 50/60Hz	510W	650W	15.0A	45M³/h	+32 to +140°F	1.10kg

* at 20℃(68°F)ambient temperature

风机加热器
Compact High-performance Fan Heater CS 130 950W, 1200W

- ◎ Compact design紧凑型设计
- ◎ High heating performance高效率散热
- ◎ Double insulated双绝缘
- ◎ Integrated thermostat(optional)智能温控器
- ◎ Optional clip or screw fixing导轨或螺丝固定

The compact high performance fan heater prevents formation of condenSation andprovides an evenly distributed interior air temperature in enclosures with electric/electronIc components.The plastic enclosure provides double insulation andacts as protection against contact.The fan heater iS available with optional integ rated the-rmostat for temperatu re control.The CS 130 was designed as a stationary unit for wall fixing.For fixing on the bottom of the enclosure the fan heaterCS 030 is recommended.

这种紧凑高性能风机加热器能防止产生凝露，为机箱内部提供分布均匀的空气温度环境。塑料外壳具有双绝缘功能，起接触保护作用。根据要求可与温控器连用来控制温度。CS130具有墙上固定功能。

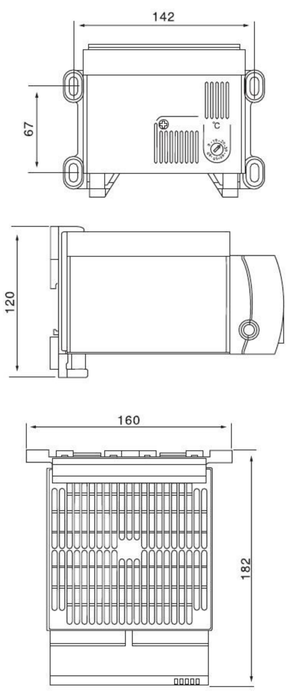

Technical Data 技术参数	
加热元件Heater element	热敏阻(PTC) PTC resistor,self regulating and temperature limiting
温度保护 Temperature safety cut-out	风扇故障时过热保护自动复位 to protect against overheating in case of fan failure
滚珠风机Axial fan，ball bearing	风量见如下图表airflow see table service life 50，000h at 25℃(77°F)
接线方式Connection	两极最大2.5mm²,带孔螺丝 2-pole clamp max. 2.5mm²clamping screw torque 0.8Nm max
外壳材料Casing	黑色塑料，UL94V-0标准，V-0防火等级 plastic according to UL94 V-0，light grey
安装方式Mounting	35mmDIN导轨安装，clip for 35mm DIN rail，EN 6071 5
安装方向Fitting position	横向horizontal
外观尺寸Dimensions	182×160×120mm
重量Weight	大约1. 25千克approx. 1. 25kg
操作/储存环境 Operating/storage temperature	-45 to+ 90℃(-49 to+ 194°F)
防护等级 Protection type/Protection class	IP20/II(double insulated)(双绝缘)

接线示意图
Connection diagram

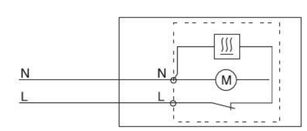

加热功率
Heating capacity/Ambient temperature diagram CS 130

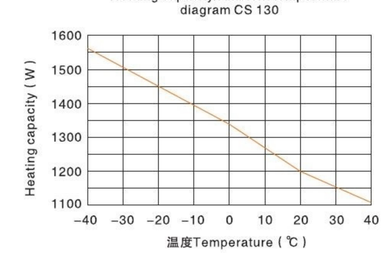

订货代号 Art.No.	型号Model	工作电压 Operating voltage	功率 Heating capacity	最大电流 Inrush current max.	设定范围 Setting range
13060.0-00	Fan Heater with thermostat	230VAC, 50/60Hz	1.200W	13A	0 to +60℃
13060.0-01	Fan Heater without thermostat	230VAC, 50/60Hz	1.200W	13A	-
13060.9-00	Fan Heater with thermostat	120VAC, 50/60Hz	1.200W	16A	+32 to +140°F
13060.9-01	Fan Heater without thermostat	120VAC, 50/60Hz	1.200W	16A	-

* at 20℃(68°F)ambient temperature

风机加热器250W-400W
Fan Heater HGL 046 250W-400W

- ◎ Compact design紧凑的设计
- ◎ Clip fixing导轨式安装
- ◎ Long service life使用寿命长
- ◎ Maintenance free免维护
- ◎ Temperature safety cut-out安全温度断流功能

Compact fan heater prevents formation of condensation. The integrated high performanceaxial fan provides forced air circulation and SO guarantees an even temperature in enclosuresWith internal terminal connector.

紧凑型风扇加热器，可预防水珠形成，一体轴流风扇提供强力空气循环，使开关箱内温度稳定。当风扇故障时，内建安全开关会自动切断停止加热器继续加热。

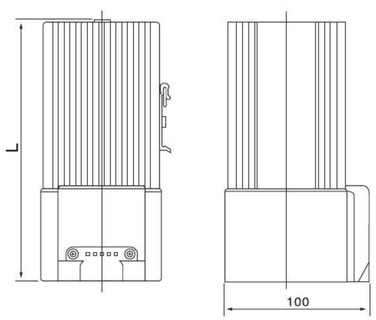

Technical Data 技术参数	
Heating element加热原理	resistance heater电阻性加热器
Temperature safety cut-out温度安全切断	to protect against overheating in case of fan failure 风扇故障时，避免加热器过热
Heater body散热体	anodised extruded aluminium profile阳极氧化挤压铝合金
Surface temperature表面温度	max.75℃(400W)最高75℃(400W)
Axial fan，ball bearing轴承轴流风扇	Airflow, free flow空气自由流动
	AC：45m3/h(50HZ)or 54m3/h(60Hz) 风量：AC：45m3/h(50HZ)or 54m3/h(60Hz)，DC：54m3/h
	DC：54m3/h
	service life 50 000h at 25℃(77°F) 使用寿命50 000小时 at 25℃(77°F)
Connection连接	internal connection terminal 1.5mm² with clamping torque 0.8Nm max. 内部钳压连接，线粗1.5mm2，夹紧扭矩0.8Nm
Connection casing外壳	Plastic according to UL94 V-0, black ULg4V-0黑色塑料
Mounting安装	Clip for 35mmDIN rail，EN 60715 35mmDIN导轨安装
Fitting position安装方向	Vertical任意
Operating/Storage temperature适用温度	-45 to+70℃(-49 to+58°F)
Protection type/Protection class保护等级	IP20，I(earthed/接地)

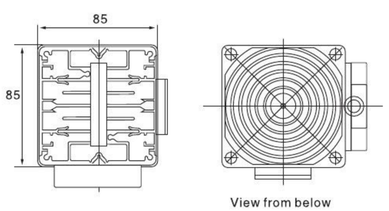

Note：In the case of 24VDC and 48VDC the fan heater has to be switched via a relay. For this purpose we recommend our electronic relay SM 010(Art.No.01000.0-00 and 01001.0-00).

注：若使用24VDC和48VDC风扇加热器，需使用一个转换继电器，我们建议使用我们的电子继电器SM 010(型号01000.0.00和01001.0-00).

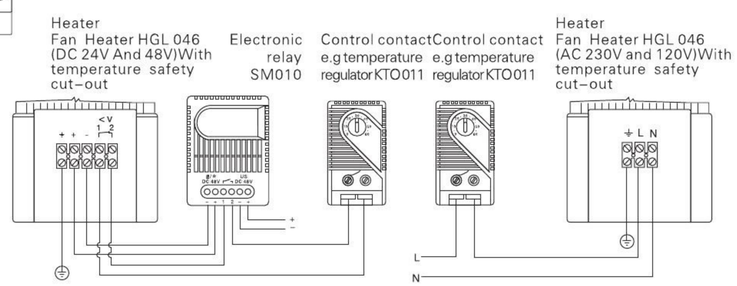

订货代号Art.No.	操作电压Operating voltage	功率Heating capacity	长度Length(L)	重量Weight(approx.)
04640.0-00	230VAC, 50/60Hz	250W	182mm	1.10kg
04641.0-00	230VAC, 50/60Hz	400W	222mm	1.40kg
04640.9-00	120VAC, 50/60Hz	250W	182mm	1.10kg
04641.9-00	120VAC, 50/60Hz	400W	222mm	1.40kg
04640.1-00	24VDC	250W	182mm	1.10kg
04640.2-00	48VDC	250W	182mm	1.10kg
04641.2-00	48VDC	400W	222mm	1.40kg

触摸安全型加热器CS 060系列50W-150W
Touch-safe Heater CS 060 Series 50W-150W

- ◎ Low surface temperature表面温度低
- ◎ Quick mounting due to clip fixing导轨式安装
- ◎ Doble insu lated(plastic)双绝缘(塑料)
- ◎ Wide ovltage range宽电压范围
- ◎ Small size小体积

Touch-sateh neater for the use In enclosures With electrical / electronlcal components. The deslgn of the heater supports the natural convection whlch results In a hlah air-Current of warm alr. The surface temperatures on tne accesslble side surfaces of the housing are kept down as a result of the heater design. Our complete range of thermostats and hygrostats can directly be connected to the heater CS 060. This heater is also available in a version with plug-in tnermostat requiring no additional wiring(CSF 060). Both versions are designed for permanent operation.

触摸安全型加热器主要用于有关电气和电子的配件的开关箱中，其设计采用自然对流方案，从产品加热体到外壳表面的设计采用温度逐渐降低的设计理念。我们全系列的温控器和湿度控制器均可直接连接到加热器CS 060上使用。其次该加热器也可与外挂恒温器连接，不用单独接线。

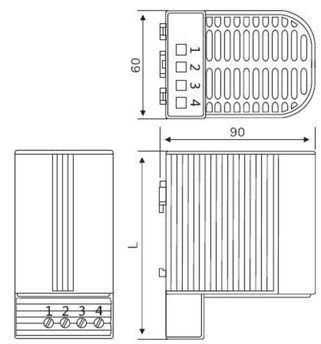

Technical Data 技术参数	
Operating voltage操作电压	120-240V AIG/DC*(min. 110V, max. 265v)
Heating capacity加热功率	见下表see table
Heater element加热原件	PTC限温元件PTC resistor-temperature limiting
Surface temperature表面温度	除了上部防护的网格均<80℃(176°F) <80~C(176°F)，except upper protective grille
Connection接线方式	螺丝4-pole terminal 2. 5mm²torpue 0. 8Nm max.
Casing外壳材料	黑色塑料，UL94V-0标准，V-0防火等级Plastic according to UL94-V-0，black
Mounting安装方式	35mm DIN导轨安装clip for 35mm DIN rail，EN 50022
Fitting position安装方向	垂直Vertical
Operating/storage tmperature 操作储存环境	-45 to+70℃(-49 to+158°F)
Ptotection type/Protection class 防护等级	IP20 / II(double insulated)
Note注意	其他电压可定做other voltages on request

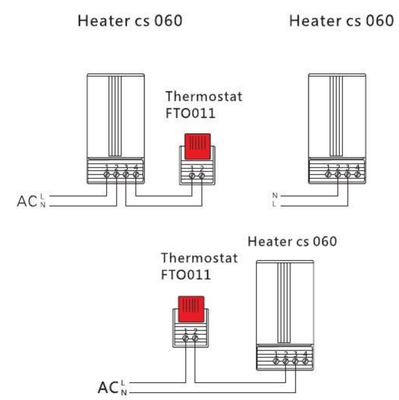

接线示意图
Examples of connection

* Operating with voltages below 140V AC/DC reduces heating performance by approx. 10%

* 工作电压低于140VAC/DC时，加热性能降低约10%

加热功率
Heating capacity/Ambient temerature diagram cs 060

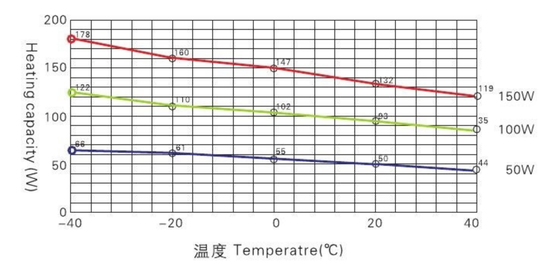

订货代号Art.No.	功率Heating capacity	最大电流Inrush current max.	空气出口温度Air outlet temperature[2]	尺寸Dimensions	重量Weight(approx.)
06000.0-00	50W	2.5A	+86℃（186.8°F）	110×60×90mm	0.30kg
06010.0-00	100W	4.5A	+120℃（248°F）	150×60×90mm	0.30kg
06020.0-00	150W	8A	+145℃（293°F）	150×60×90mm	0.30kg

1)amdient temperature-see Heating capacity/Ambient temperattre diagram; 2)measured 50mm above protective grille;

触摸安全型加热器CSF 060系列50W-150W
Touch-safe Heater CSF 060 Series 50W-150W

- ◎ Low surface temperature表面温度低
- ◎ Quick mounting due to clip fixing导轨式安装
- ◎ Doble insu lated(plastic)双绝缘(塑料)
- ◎ Wide ovltage range宽电压范围
- ◎ Small size小体积
- ◎ Integrated thermostat智能温控器

Touch–safe heater for the use in enclosures with electrical–electronical components. The design of the heater supports the natural convection which results in a high air –current of warm air. The surface temperatures on the accessible side surfaces of the housing are kept down as a result of the heater design. This model with plug–in thermostat does not require additional wiring. The heaters are designed for perm –anent operation. This heater is also available in a ve rsion without thermostat (CS 060).

触摸安全型加热器主要用于有关电气和电子配件的开关箱中，其设计采用自然对流方案，从产品加热体到外壳表面的设计采用温度逐渐降低的设计理念，该加热器也可与外挂恒温器连接，不用单独接线，也可以在不加温控器的情况下使用。

Technical Data 技术参数	
Operating voltage操作电压	120–240V AIG/DC*(min. 110V, max. 265v)
Heating capacity加热功率	见下表see table
Heater element加热原件	PTC限温元件PTC resistor–temperature limiting
Surface temperature表面温度	除了上部防护的网格均<80℃(176°F) <80~C(176°F)，except upper protective grille
Connection接线方式	螺丝4–pole terminal 2. 5mm²torpue 0. 8Nm max.
Casing外壳材料	黑色塑料，UL94V–0标准. V–0防火等级Plastic according to UL94–V–0，black
Mounting安装方式	35mm DIN导轨安装clip for 35mm DIN rail，EN 50022
Fitting position安装方向	垂直Vertical
Operating/storage tmperature 操作储存环境	–20 to+70℃(–4 to+158°F)/–45 to+70℃(–49 to+158°F)
Ptotection type/Protection class 防护等级	IP20 / II(double insulated)
Note注意	其他电压可定做other voltages on request

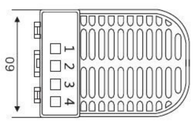

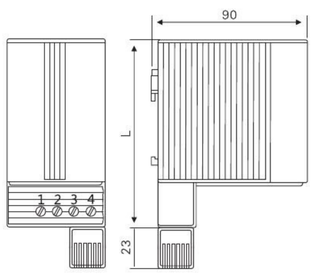

* Operating with voltages below 140V AC/DC reduces heating performance by approx. 10%
* 工作电压低于140VAC/DC时，加热性能降低约10%

Heater CS 060

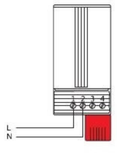

接线示意图
Examples of connection

加热功率 Heating capacity/Ambient temerature diagram cs 060

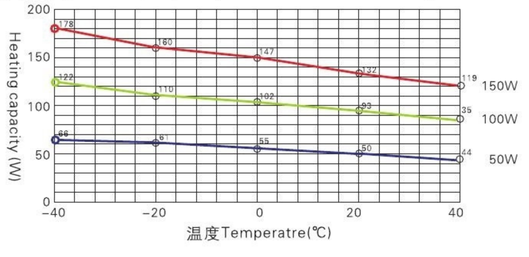

订货代号 Art.No.	功率 Heating capacity	最大电流 Inrush current max.	空气出口温度 Air outlet temperature[2]	关闭温度 Switch–off temperature[3]	关闭温度 Switch–off temperature[3]	尺寸 Dimensions	重量 Weight(approx.)
06001.0–00	50W	2.5A	+86℃（186.8°F）	+15℃（59°F）	+15℃（41°F）	110×60×90mm	0.30kg
06002.0–00	50W	2.5A	+86℃（186.8°F）	+25℃（77°F）	+25℃（59°F）	110×60×90mm	0.30kg
06011.0–00	100W	4.5A	+120℃（248°F）	+15℃（59°F）	+15℃（41°F）	110×60×90mm	0.30kg
06012.0–00	100W	4.5A	+120℃（248°F）	+25℃（77°F）	+25℃（59°F）	110×60×90mm	0.30kg
06021.0–00	150W	8A	+145℃（293°F）	+15℃（59°F）	+15℃（41°F）	150×60×90mm	0.50kg
06022.0–00	150W	8A	+145℃（293°F）	+25℃（77°F）	+25℃（59°F）	150×60×90mm	0.50kg

1)amdient temperature–see Heating capacity/Ambient temperattre diagram; 2)measured 50mm above protective grille;

小型半导体风机加热器CSL028
CSL028 Small Compact Semiconductor Fan Heater 150W,250W, 400W

- ◎ Small,compact design紧凑型设计
- ◎ Quiet in operation无噪声
- ◎ Dynamic heating up高效加热
- ◎ Clip or screw fixing导轨或螺丝安装

Fan heater prevents formation of condensation and provides an evenly distributed interior ai r temperatu re in enclosu res with electric/electronic components. The heater is connected using the internal terminal connectors The CS 028s small size make it ideal for use in enclosures where space is at a premium

风扇加热器使用于配电柜中，该产品可用螺丝安装或DIN导轨安装，该加热器可保护开关元件和控制器柜内的温度，防止凝露。

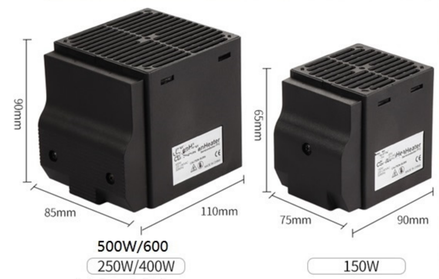

Technical Data 技术参数	
发热元件Heating element	PTC发热元件PTC heating element
最大峰值电流Inrush current max.	2A at 230VAC,5A at 120VAC
表面温度Surface temperature	最高65℃ (149°F) Max. 65℃ (149°F)
滚珠风机Axial fan，ball bearing	空气流动13.8 m³/h，(在40℃时使用寿命40,000h) air flow 13.8 m³/h，free flow(service life 40, 000h at 40℃)
接线方式Connection	螺丝 2-pole clamp max. 2. 5mm² clamping screw torque 0. 8Nm max.
外壳材料Casing	黑色塑料，UL94V–0标准，V–O防火等级plastic according to UL94 V–0，black
安装方式Mounting	35mmDIN导轨安装. clip for 35mm DIN rail,EN 60715
安装方向Fitting position	垂直vertical
重量Weight	大约0.30千克approx. 0.30kg
操作/储存环境 Operating/storage temperature	–45 to+70℃(–49 to+158°F)
防护等级 Protection type/Protection class	IP20/II(double insulated)
注意Note	其他电压可定做other voltages on request

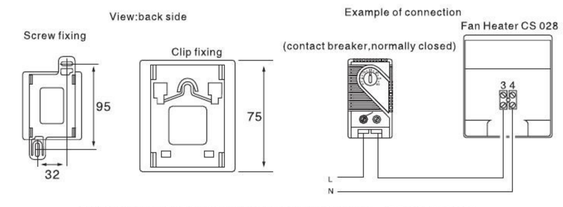

Heating capacity/ Ambient temperature diagram CS 028(150W)

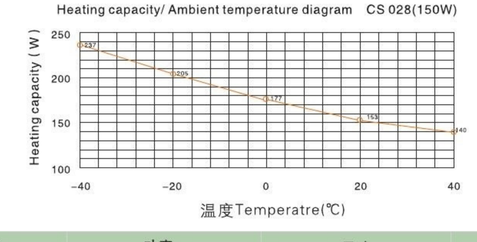

订货代号Art.No. 导轨安装Clip fixing	订货代号Art.No. 导轨安装Screw fixing	操作电压 Operating voltage	功率 Heating capacity	尺寸 Dimensions	重量 Weight
02800.0–00	02800.0–01	230VAC, 50/60Hz	150W	65 × 75 ×90 mm	0.5kg
02811.0–00	02811.0–01	230VAC, 50/60Hz	250W	90×85 × 110mm	0.5kg
02810.0–00	02810.0–01	230VAC, 50/60Hz	400W	90×85×110 mm	0.5kg
02800.9–00	02800.9–01	120VAC, 50/60Hz	150W	65×75 ×90 .mm	0.5kg
02811.9–00	02811.9–01	120VAC, 50/60Hz	250W	90×85×110 mm	0.5kg
02810.9–00	02810.9–01	120VAC, 50/60Hz	400W	90×85×110 mm	0.5kg

* at 20℃(68°F)ambient temperature

外形尺寸图：

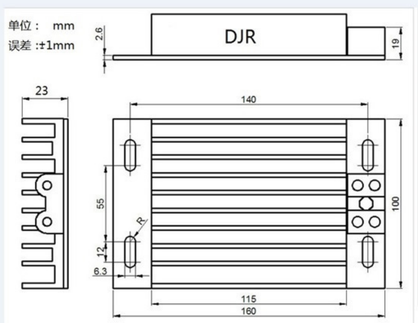

◆Overview

DJR Heater,is the development and production of the heat dissipation electrical heater based on national standard GB/T-15470-1995. The product adopts a special alumlnum extrusions of 6063-T5 for conducting the radiator.in order to increase the cooling area，and designs small ripples on each heat sink. It is internal uses the quality Ni80Cr20nickel-Chromium alloy resistance wire for heater，seiko produced.The product has small size，light weight，big heat dissipation area and long service life and the erminal device is safe and reliable，not easy to damage. As for the overall design，it has reasonable structure and beautiful appear ance.mainly used in high and low voltage switch cabinet，centrally installed cabinet，ring counter，terminal box,box-type substation and other power equipment for moisture-proof，anticondensation，dehumidifition to improve the working envlronment temperature and all the spaces need dehumidification and heating. Supporting the use of KT0011 series condensation temperature division monitor can realizethe dehumidification nd warming automation.The heater has thefeatures of good heating effect，safe and reliable usage，long workingtime without failures,easy installation and univers ally used for thedomestic various models of heater.

◆概述

DJR加热器，是根据国标(GB/T-1 5470-1995)研制生产的散热式电加热器。该产品采用6063-T5特制铝合金型材为传导散热体，为增大其散热面积，每个散热片上都设计有细小的波纹。其内部采用优质Ni80Cr20镍铬合金电阻丝为发热芯，精工制作而成。该产品体积小，重量轻，散热面积大，使用寿命长。接线装置安全可靠，不易损坏。整体设计，结构合理，外型美观。主要应用于高低压开关柜、中置柜、环网柜、端子箱、箱式变电站等电力设备防潮、防凝露、提高电气元器件工作环境温度及一切需要除湿加热的场所，与我司的KT0011系列凝露温度监控器配套使用，可实现除湿升温自动化。该加热器具有加热效果好，使用安全可靠，平均无故障工作时间长，安装方便，国内各型号加热器通用等特点。

◆技术指标Technical Indicators

工作电压：AC110V、220V、380V或DC220V、380V(客户根据需求来选型)
working voltage：ACl1OV、220V、380V or DC220V、380V(to select by the customer on demand)

工作频率：50Hz(仅适用于交流电压)
operating frequency：50Hz(only apply to the AC voltage)

绝缘电阻：>50M欧姆
insulation resistance：>50M Ohm

抗电强度：>2000V(接线端与铝介质之间)
dielectric strength：>2000V(between terminal and aluminum medium)

连续工作时间：>50004\时
continuous working time：>5000 hours

额定功率：50~500W
rated power：50-500W

at’s nee e:

1.The dimensions oflhe enclosure(Height,Width,Depth)[m]
2.The enclosure position (eg.single enclosure,enclosure in row)according to calculation formula, enclosure surface area A[m2]
3. The enclosure material(metal，plastic)heat transfer coefficient from table，k[W/m² K]
4.The temperature difference between desired enclosure interior temperature Ti[℃] and the expected ambient temperature Tu[℃] (eg day. night，summer–winter,climate zones)△T**[K=Kelvin]**
5.The stray power(self–warming)of all installed componenlsduring operation (eg.transformers,relays,semiconductors)P[W]

Calculation and selection of parameters：enclosure surface area–heat transfer coefficient–temperature difference

1. Enclosure surface area from–dimensions
2. Enclosure position(plan view)accord.to VDE 0660 part 500

- ☐ Single enclosure free on all sides
- ☐ Single enclosure.wall mounted
- ☐ First or last enclosure in free standing row
- ☐ First or last enclosure in wall mounted row
- ☐ Middle enclosure in free standing row
- ☐ Middle enclosure in wall mounted row
- ☐ Middle enclosure in wall mounted row with covered top

Formula for cabinet surface area A [m²]
H=Height W=Wdith D=Depth

A=1. 8×H×(W+D)+1. 4×W×D
A=1. 4×W×(H+D)+1. 8×D×H
A=1. 4×D×(H+W)+1. 8×W×H
A=1. 4×H×(W+D)+1. 4×W×D
A=1. 8×W x H+1. 4×W×D+D×H
A=1. 4×W×(H+D)+D×H
A=1. 4×W×H+0. 7×W×D+D×H

Example：enclosurefree on all sides,2000mm high/800mm wide/600mm deep.A=1.8 X 2.0 X(0.8+0.6)+1.4 X 0.8 X 0.6=5.712m

3.Eenclosure matrial and its heat transfer coefficent k [W/m²K]

Steel sheet,painted	K~5.5W/m²K
Steel sheet,stainless	K~4.5W/m²K
Aluminium	K~12W/m²K
Aluminium,double–walled	K~4.5W/m²K
Polyester	K~3.5W/m²K

4.Temperature difference △T [K=Kelvin]

△T =Ti–Tu

i.e.the temperature difference between the interior and exterior temperatures

CALCULATION FORMULA FOR REQUIRED HEATING PERFORMANCE(HEATER):

Required heating performance P_H [W]=enclosure surface area A [m²] heat ×transfer coefficient k [W/m²K] × temperature difference △T**[K]**

Example： W = 5.712m² × 5.5W/m²K × 15K =471.24W

Result:Heater with 500W heating performance is required.If enclosure is situate outdoors the calcuated heating performance muse be doubled!

OR CHOOSE REQUIRED HEATING PERFORMANCE FROM DIAGRAM:

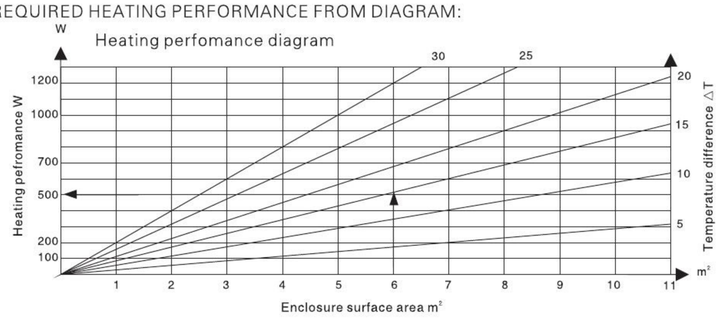

5.In the case of continuous stray power P [W] (self–warming) this must be deducted from the calculated heating performance.

ChOOSE REQUIRED COOLING PERFORMANCE FROM DIAGRAM:

OR CALCULATE USING FORMULA FOR REQUIRED COOLING PER ORMANCE(FILTER FAN):

Required air volume V [m³/h]= $\frac{\text{installed stray power Pv[W]}}{\text{temperature difference>T[K]}}$ X air constant f* [3.3m³K/Wh]

Example： V= $\frac{600W}{15K}$ × 3.3m³K/Wh =132m³/h

*f (0–100) =3.1m³K/Wh,f(100–250)=3.2m³ K/Wh,f(250–500)=3.3m³ K/Wh,f(500–750)=3.4m³K/Wh, f(750–1000)=3.5m³K/Wh

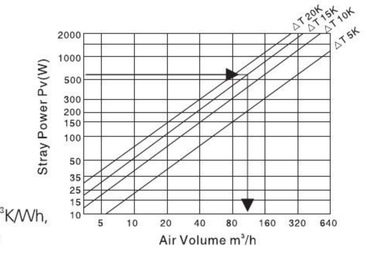

为什么要使用电气柜加热器?

电气设备在有负载工作下产生热可以阻止冷凝物的积累，然而当设备停止工作冷却下来后会逐渐的适应周围环境温度，使柜内温度下降到露点以下。因为这样就触发辐射热的需求!加热器通过提高电气柜的温度高于柜外环境温度几度的方法杜绝冷凝物的形成。

◆我公司加热器系列覆盖了从8W–1200W范围。
◆丰富的加热器配套装置: 温控器,湿度控制器，压力释放补偿装置等。

加热器的选型

计算前提条件：

1. 电气控制柜的尺寸(长，宽，高)
2. 按照惯例，必须了解电气控制柜的安放位置(例如：单柜、排柜)及电气柜的有效表面积
3. 电柜柜体材质(例如：金属、塑料)的热交换系数(W/m²K)
4. 电柜内的设定温度Ti(℃)及柜外温度Tu(℃)(例如：日一夜，夏季一冬季，气候变化)的温度差值△T(K)
5. 电柜内部电气设备(例如：变压器、继电器及变频器等)在工作时散发的热量

选择参数进行计算

1. 根据电柜尺寸计算其表面积
2. 电柜的摆放位置(如下图所示)
   单个四周空敞
   单个靠墙
   排柜中最前或最后单元，其余空敞
   排柜中最前或最后单元，靠墙
   排柜中间单元. 后面空敞
   排柜中间单元，靠墙
   排柜中间单元，靠墙上面有覆盖

电柜表面积计算公式A(m²)(H高，W宽，D深)

A=1. 8×H×(W+D)+1. 4×W×D
A=1. 4×W×(H+D)+1. 8×D×H
A=1. 4×D×(H+W)+1. 8×W×H
A=1. 4×H×(W+D)+1. 4×W×D
A=1. 8×W x H+1. 4×W×D+D×H
A=1. 4×W×(H+D)+D×H
A=1. 4×W×H+0. 7×W×D+D×H

例：电柜四周空敞，2000mm高/800mm宽/600mm深, 则A=I. 8 X 2. 0 X(0. 8+0. 6)+1. 4 X 0. 8 X 0. 6=5. 712m²

3. 电柜柜体材质及其换热系数K(W/m²k)

漆面钢板	5. 5 W/m²k
不锈钢板	4. 5W/m²k
铝板	12 W/m²k
双层结构铝板	4. 5W/m²k
塑料板	3. 5W/m²k

4. 柜内外温度差值△T(K)
   △T= Ti–Tu

所需要发热量的计算公式(发热器)
需要的发热量P(W)=电气柜表面积A(m²)X柜体材质换热系数K(W/m²k)X温度差值△kT(K)
例：W=5. 712 m² x 5. 5W/m²k X 15K=471.24W
结果：需要发热量为500W的发热器才能满足要求，若电柜位于户外，所需要发热器的发热量要加倍通过下面的经验图选型

5. 若电气柜柜内电气设备工作时有发热，在计算发热器发热量时必须减去电气设备发热量。

过滤风扇的选型
根据下面的经验图表选择合适的冷却设备：
通过计算公式计算来选择冷却设备(过滤风扇)
需要的空气流量V(m³/h)=[需要处理的发热量PV/柜内外温差A T(K)]×空气常数[3.3m³K/Wh]
例：V=[600W/15K]X 3.3m³K/Wh=132m³/h
空气常数的数值范围：
PV(0–100)=3.1m³K/Wh
PV(100–250)=3.3m³K/Wh
PV(250—500)=3.3m³K/Wh
PV(500—750)=3.4m³K/Wh
PV(750–1000)=3.5m³K/Wh

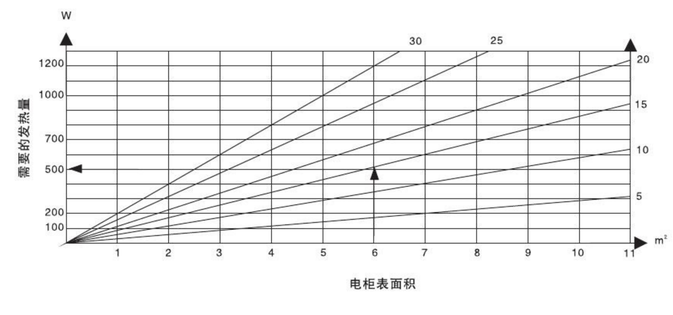

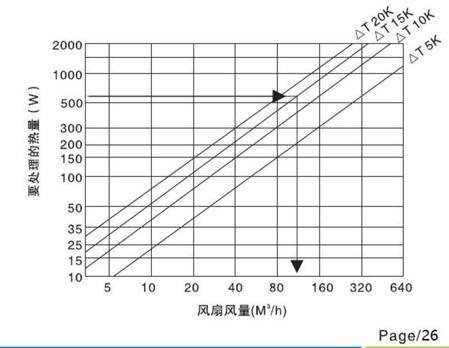

HY-FRH605

Overview

The electromechanical hygrostat HY-FRH605 is designed to control enclosure heaters so that the dew point is raised when a critical relative humidity of 65% is exceeded In this way condensation and corrosion in enclosures with electric/electronic co mponents is effectively prevented.

Characteristic

- Adjustable relative humidity
- Change-over contact
- High switching capacity
- Easily accessible terminals
- Clip fixing

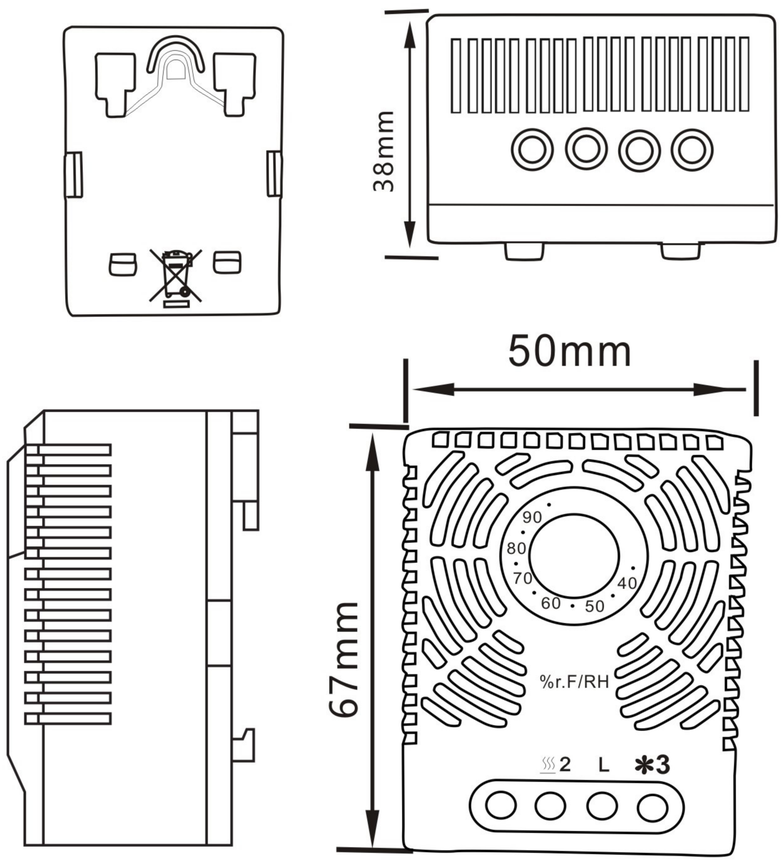

Technical Data

HY-FRH605	
Switch difference[1]	±5% RH
Permissible air velocity	15m/sec.
Contact type	change-ov er contact
Service life	>50,000 cycles
Min.switching capacity	20VAC/DC 100mA
Max.switching capacity	250VAC,5A; DC20W
Connection	3-pole terminal for 2.5mm² ,clamping torque 0.5Nm max.: rigid wire 2.5mm²(AWG 14); stranded wire[2] 1.5mm²(AWG 16)
Mounting	cip for 35mm DIN rail,EN 60175
Casing	plastic according to UL94V-0,light greyl
Dimensions	67x50x38mm
Weight	approx. 60g
Fitting position	variable
Operating/Storage temperature	0 to +60℃(+32 to +140°F) /-40 to +60℃(-40 to +140°F)
Operating/Storage humidity	max.95% RH(non-condensing)
Protection type	IP20

[1]at 50% RH

[2] When connecting with stranded wires, wire end ferrules must be used.

Connection diagram

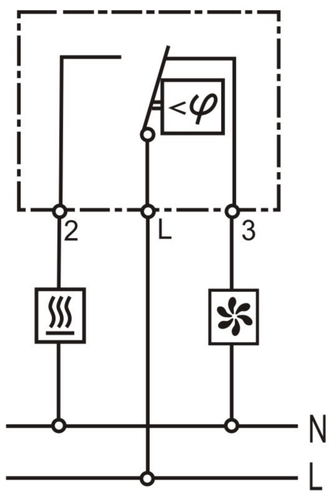

Heater

Filter fan, Cooling equipment, Signal device

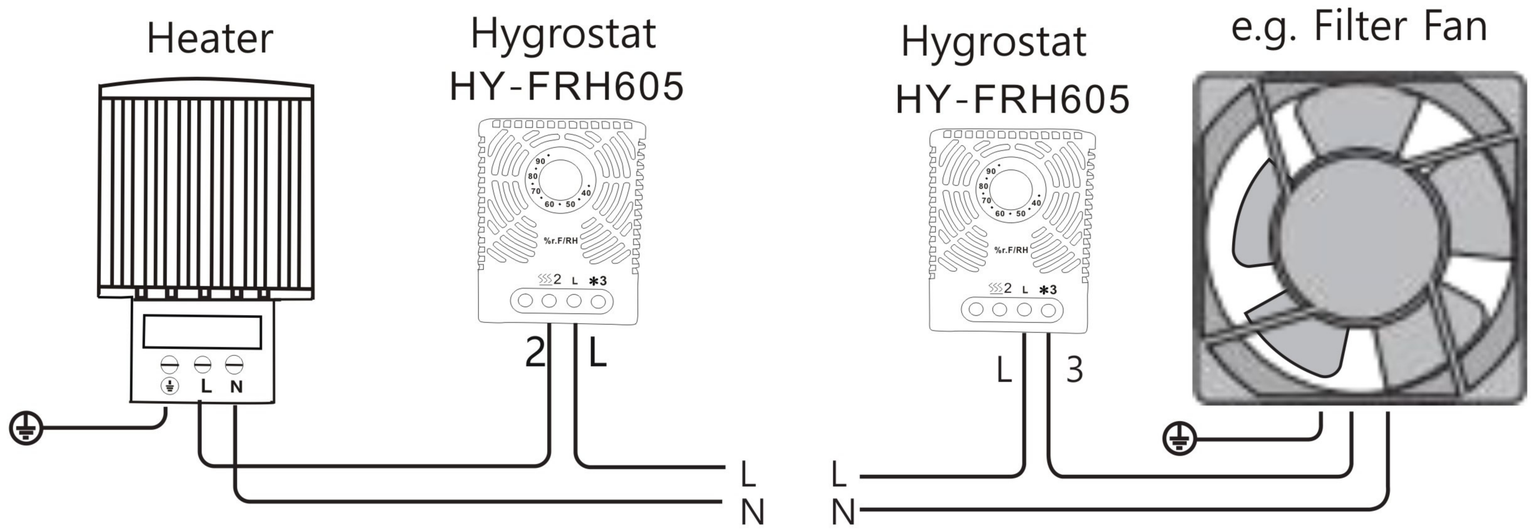

Example of connection

Art. No.	Setting Range
605.0-00	35 to 95% RH

Focusing on cabinet environment control to protect the safety of your equi pment

TypeHYPN 200/300/400/600 SERIES

Ordering Example

Series Name	TypeHYN
Rated Wattage	200/300/400/600
Heater Voltage 115/ 230	**230V**
Connection Type F = Fly Wire C = Cord + IEC Connector	**F**

Features

- Robust electrically isolated heating element
- Simple design and easy to install
- Simple electrical connection (fan and heater combined)
- Fixing - 35mm DIN-rail mount
- Complies RoHS (EU Directive 2002/95/EC)

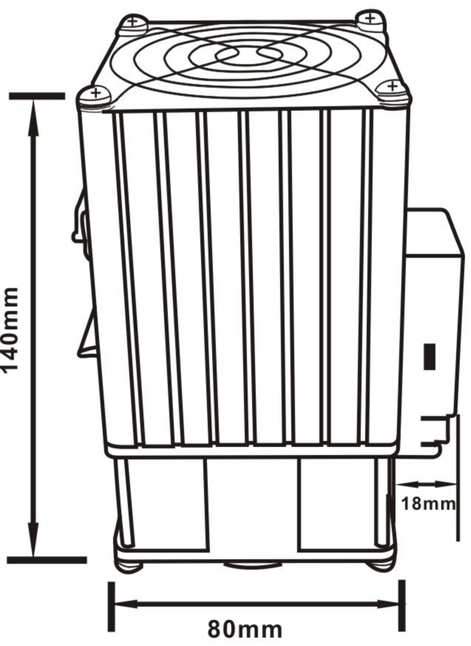

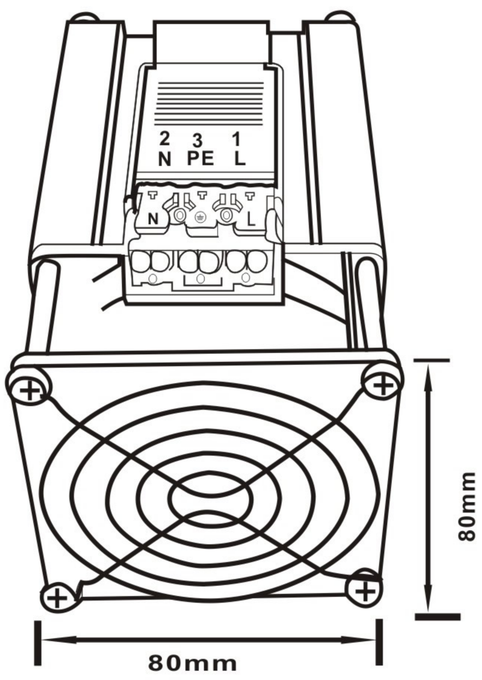

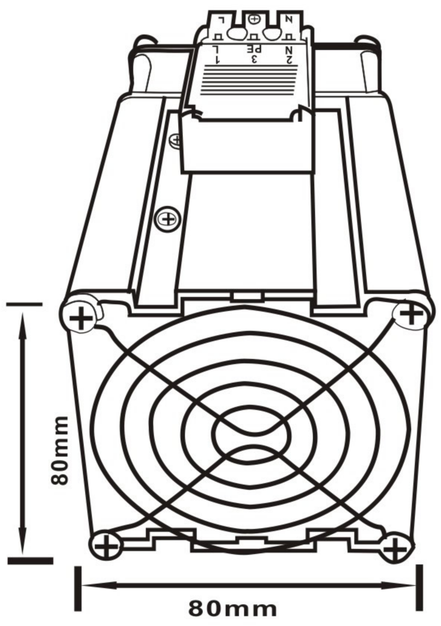

Type	(80mm Axial Fan PTC Heating Element)			
	HYN 200	HYN 300	HYN 400	HYN 600
Nominal Power Output at 10 (50)	200W	300W	400W	600W
Nominal Input Voltage Heating Element	115V/230V			
Typical Peak Inrush Current 115V/ 230V (Arms)	4/2	6/4	8/6	12/10
Nominal Input Frequency	50 - 60Hz			
Max. Body Temperature (25 C ambient)	74°C (165°F)			
Fan Operating Temperature Range	-10 to + 70 (14 to + 158)			
Storage Temperature Range	-40 to + 70 (40 to + 158)			
Fan Lifetime (mean time until 15% speed reduction, ambient air at 70 and 66% r.h.)	65,000 hr			
Fan Volumetric Flow Rate - 50Hz (230 VAC)	$40m^3$/ hr (24CFM)			
- 60Hz (115 VAC)	$50m^3$/ hr (31CFM)			
Dimensions - Cross Section	(140x80X80mm)			
Length	140mm	140mm		140mm
Weight	780g	790g		800g
Ingress Protection (EN60529)	IP20			
Electrical Protection Class	SK I			
Recommended Fuse Time Delay (A)	4	6	8	12

Note: All data are for unit operated in vertical orientation.

CE ROHS

Heater HYN

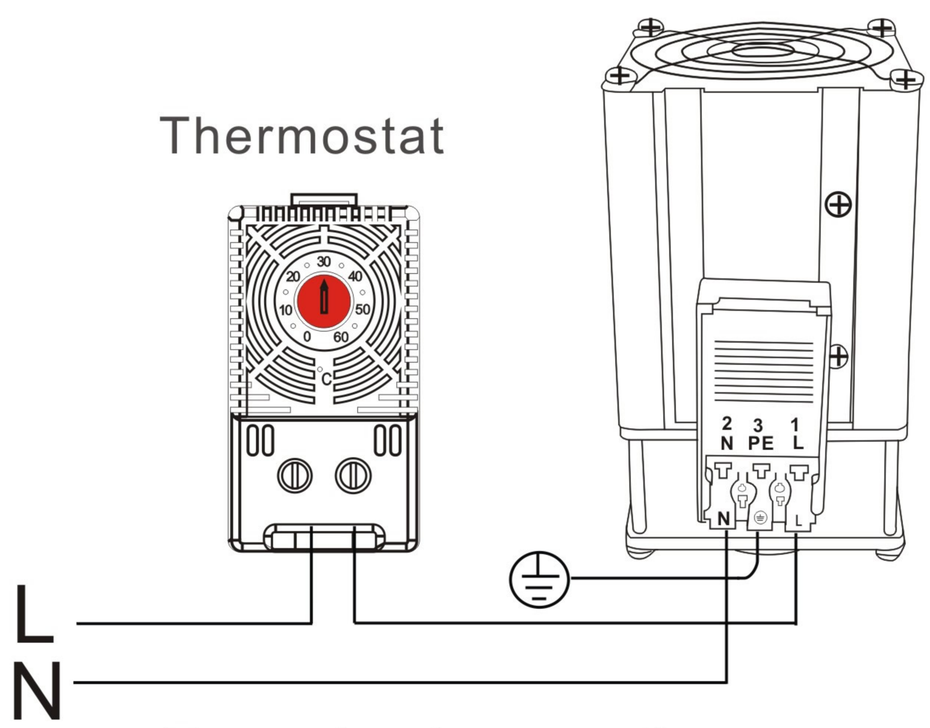

Example of connection

Connection

115V/230VAC Version

Neutral	N(2)
Live	L(1)
Ground	3(PE)

ezitown INDUSTRIALTHERMOSTAT

HY-TC603 :

thermostst is used for controlling heating and coolingequipment, filter fans or signal devices.The thermostat registers thesurrounding ai r and can canswitch both indnctive abd resistive loadsvia snap-action contact.

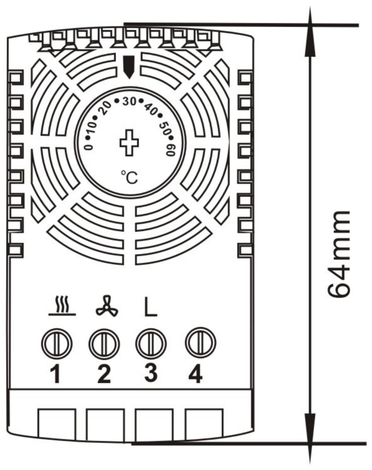

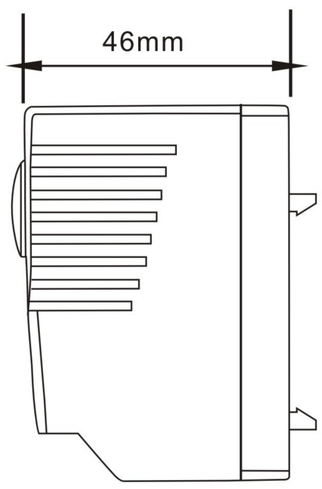

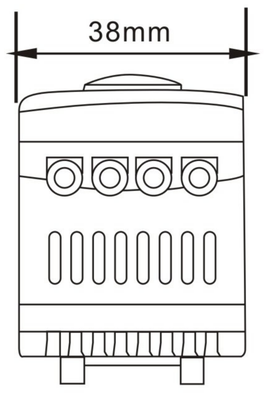

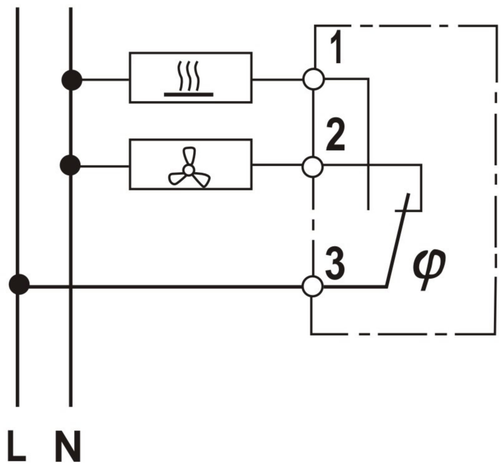

HY-TC603	
SPST-NC/NO	
Max switchingcapacity	250V AC 10(2)A 120V AC 15(2) AC DC (30/110/220)V (1/0.3/0.15)A
Operating/Storage temperature	(-45...+80)℃
Switch temperature difference K	7K (±4K)
Protection type	IP 20
Service life	>100 000 次
Mounting	clip for 35mm DINrail EN60715
Casing	plastic according to ULV-0,light grey
Fitting position	Variable
Weight	Approx.65g

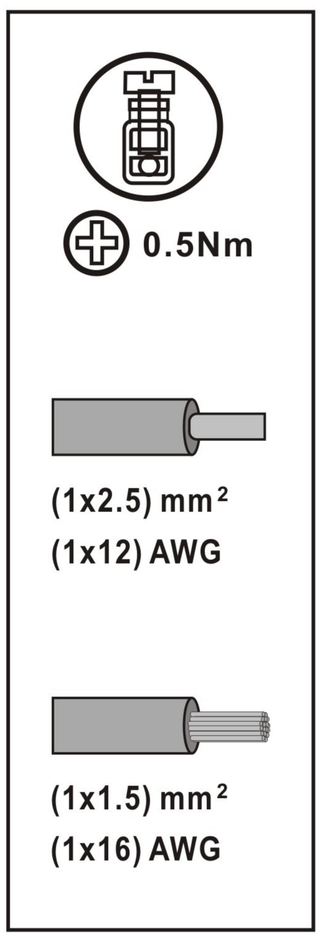

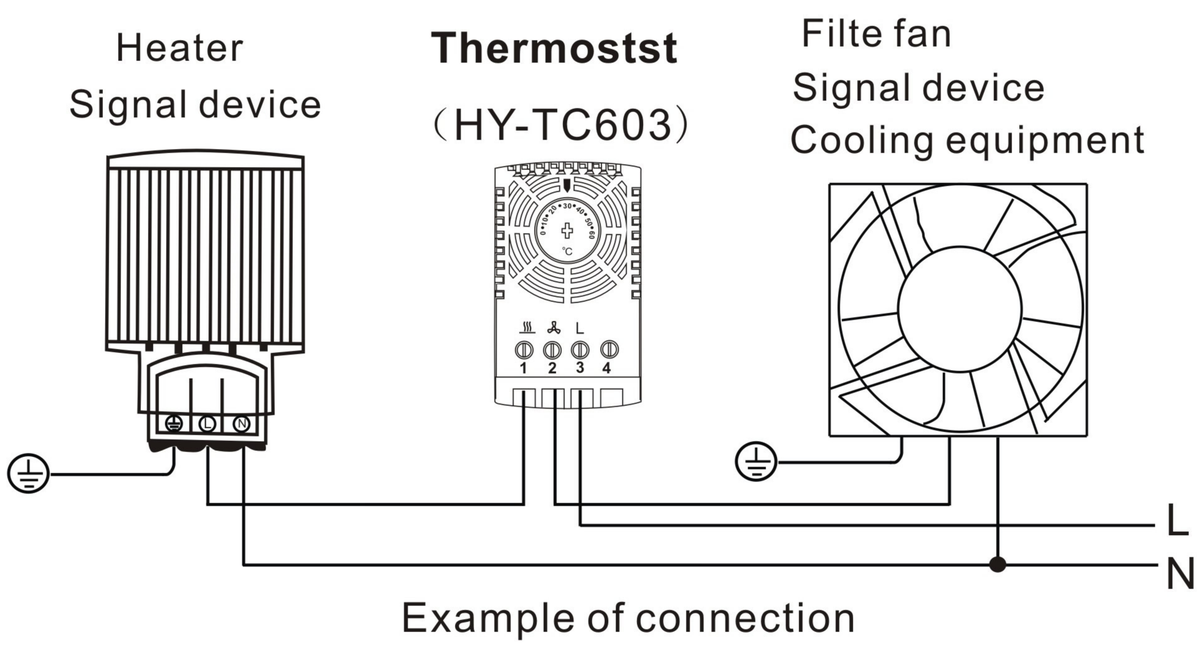

Example of connection

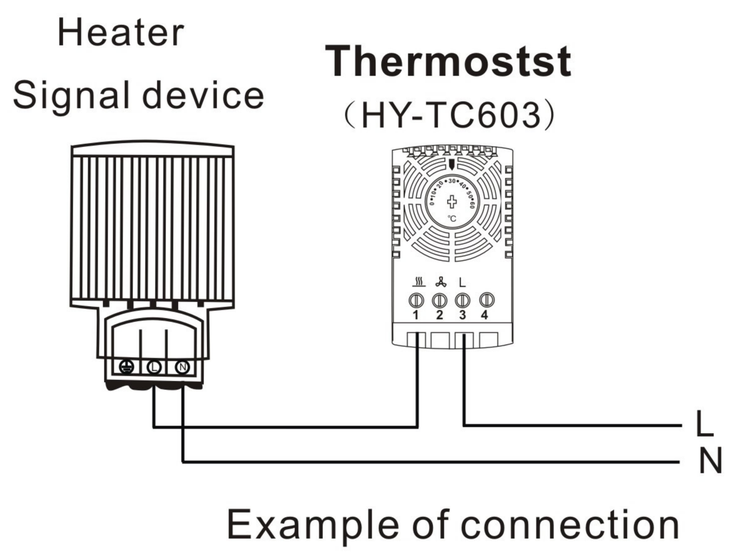

Example of connection

setting Range	Art.No.
0 to +60℃	6031
−20 to +40℃	6032
−15 to +45℃	6033
−10 to +50℃	6034
+20 to +80℃	6035
+14 to +122℉	6036
+32 to +140℉	6037

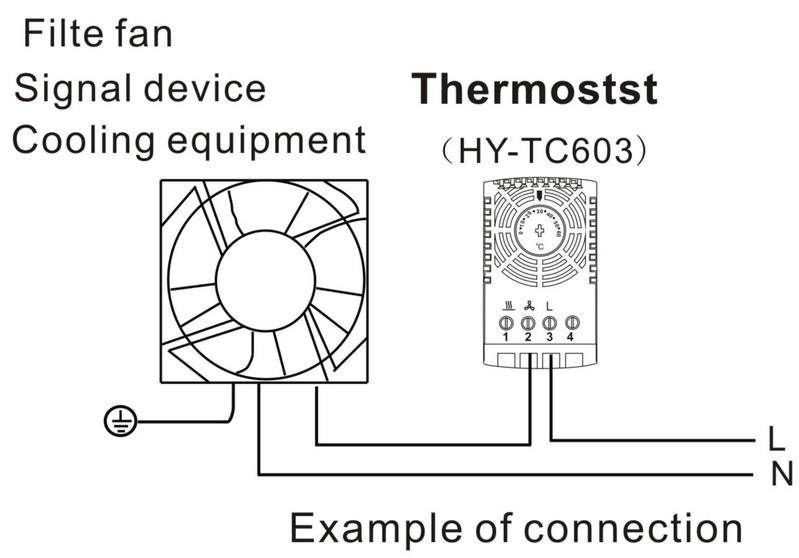

Example of connection

Sk3105 50W to150W

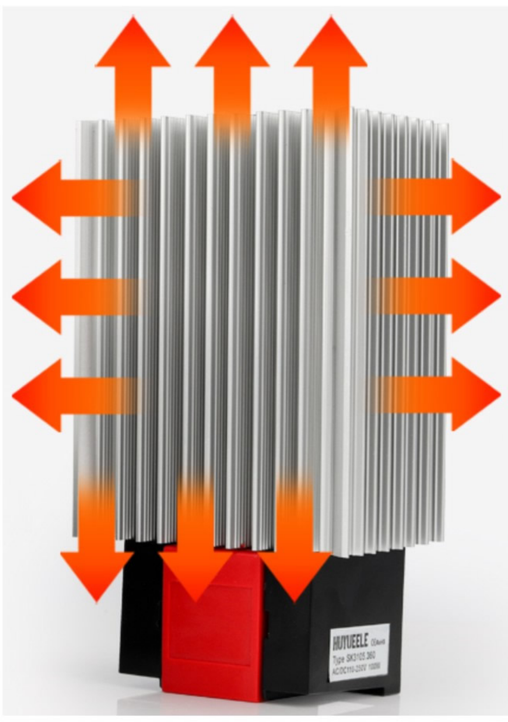

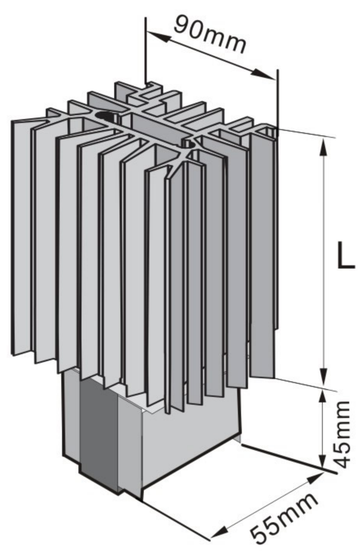

Overview

Enclosure heaters to regulate relative humidity, prevent temperatu res from dropping below the dew point and stop condensation for ming inside the enclosure. This prevents consequential damage associated with corrosion or electrical short circuits.

Note:

- A thermostat is recommended for precise temperature control inside the enclosure.
- In order to prevent condensation on assemblies, a hygrostat is recommended to regulateheating
- In larger enclosures, even heatdistribution is best achieved by installing several low-outputheaters.

Technical Data

SK3105	
Heater body	Extruded aluminium profile,anodised
Heating element	PTC resistor-temperature limiting
Operating voltage	110-240V[1] AC/DC(min.110V,max.265V)
Connection	3 xPressure terminal for strand0.5–1.5mm² (with wire end sleeve) and rigid wire0.5– 2.5 mm²
Connection casing	Plastic according to UL94V-0,black
Mounting	Clip for 35mm DIN rail,EN 60715
Installation position	vertical airflow(air outlet up,connection on bottom)
Operating/Storage temperature	-45to+70℃(-49to+158°F)
perating/Storage humidity	max. 90% RH (non-condensing)
Protection type/Protection class	IP20/I(earthed)
Supply includes	PTC heater Quick-connection terminal Assembly parts
Notes	other voltages on request

*Operating with voltages below 140VAC/DC reduces heating performance by approx.10%

- Pressure clamp connectors
- Dynamic heating up
- Wide voltage range
- Energy saving
- Clip fixing, Quick installation

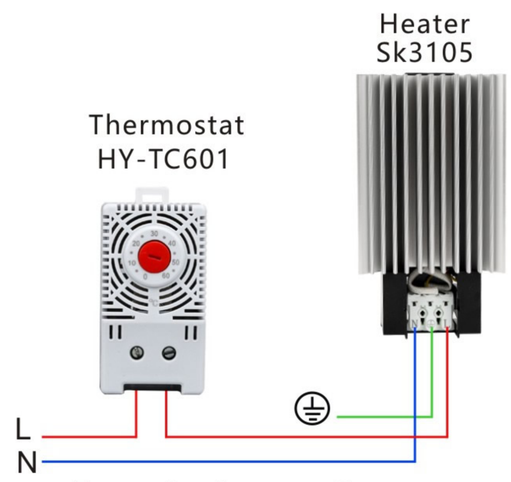

Example of connection

Art.No.	Heating capacity[2]	Length(L)	Weight(approx.)
3105.340	50W	75mm	0.54kg
3105.350	60W	75mm	0.54kg
3105.360	75W	120mm	0.8kg
3105.370	100W	120mm	0.8kg
3105.380	150W	135mm	0.9kg

[2]at +20°C (+68°C) ambient temperture

Focusing on cabinet environment control to protect the safety of your equi pment

ezitown INDUSTRIALTHERMOSTAT

STO011: Thermostat (normally closed); contact breaker for regulating heaters. The contact opens when temperature is rising.

STS011: **Thermostat (normally open);** contact maker for regulating of filter fans and heat exchangers or for switching signal devises when temperature limit has been exceeded. The contact closes when temperature is rising.

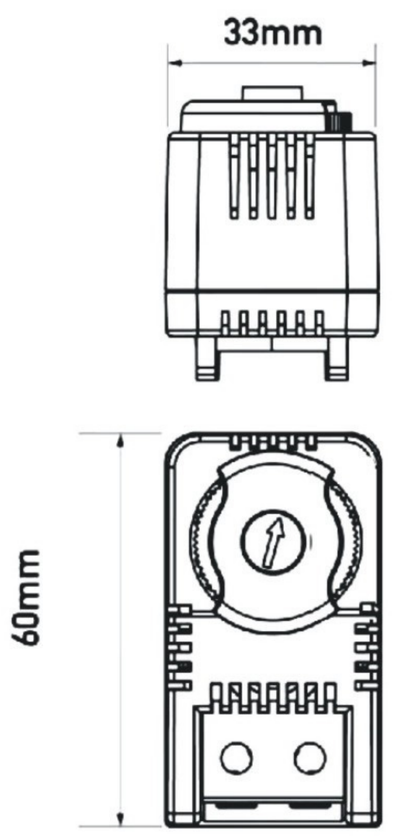

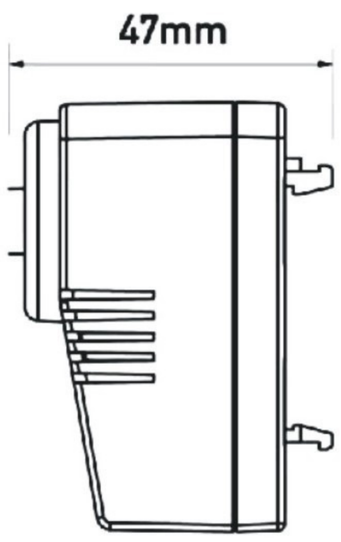

STS011	STO011
1NC(SPST-NC)	1NO(SPST-NO)
Max switchingcapacity	250V AC 10(2)A 120V AC 15(2) AC DC (30/110/220)V (1/0.3/0.15)A
Operating/Storage temperature	(-45...+80)℃
Switch temperature difference K	7±4
Protection type	TP20
Service life	>100 000cycles
Mounting	clip for 35mm DINrail EN60715
Casing	plastic according to ULV-0,light grey

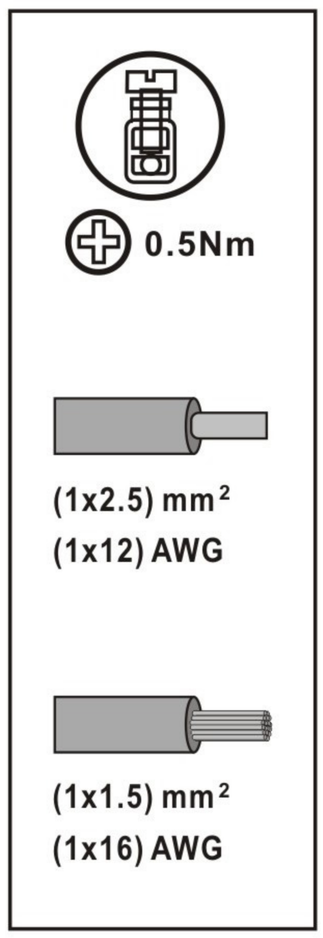

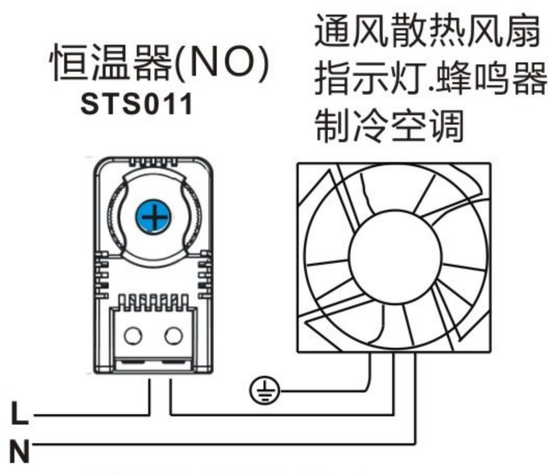

接线示意图

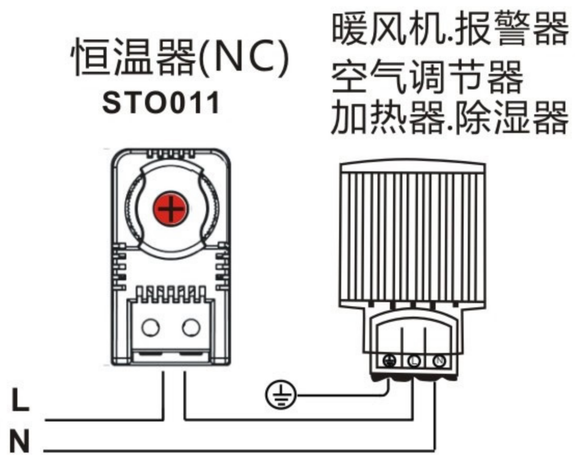

接线示意图

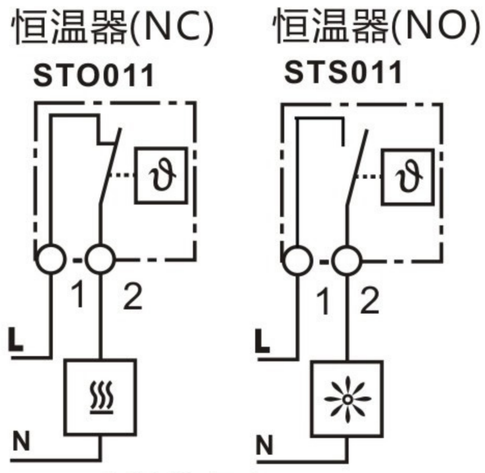

线路图

setting Range	Art.No.(NC) STO011	Art.No.(NO) STS011
0 to +60℃	T810	T820
−20 to +40℃	T811	T821
−10 to +50℃	T812	T822
+20 to +80℃	T813	T823
+14 to +122℉	T814	T824
+32 to +140℉	T815	T825
−15 to +45℃	T816	T826